2002 EDITION

STUDENT

Hazardous Materials Transportation Training Modules

MODULE 3
Marking and Labeling

U.S. Department of Transportation
Research and Special Programs Administration

Script

Visual

Narrative

1

This module presents the DOT requirements for marking and labeling hazardous material packages. The shipper must mark each package, freight container and transport vehicle, which contains hazardous materials in accordance with the applicable regulations.

2

The term marking as used in the HMR refers to the required information on an outer package containing hazardous materials.

This includes a proper shipping name,

identification number (ID No.),

specifications or UN marks,

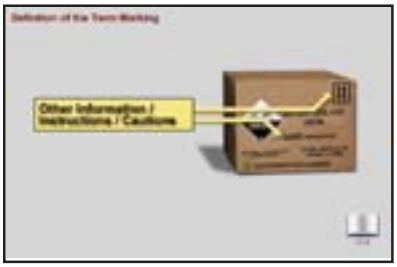

plus any required information , instructions and/or cautions.

3

Each person who offers a hazardous material for transportation must mark each package, freight container, and transport vehicle containing the hazardous materials as prescribed in the HMR. Additionally, when required, each carrier that transports a hazardous material shall mark each package, freight container, and transport vehicle, as prescribed. Click on each button to learn more about these marking requirements.

4

Each person who offers for transportation a hazardous material in a non-bulk packaging must mark the package with the proper shipping name and the assigned ID Number preceded by the letters “UN” or “NA.” There are exceptions to these requirements, which were addressed in the Packaging Module. There are specific marking requirements for bulk packaging, cargo tanks, tank cars, and portable tanks.

5

Packages containing hazardous materials with proper shipping names that have the letter “G” in Column 1 of the HMT must be marked with the proper shipping name and the technical name(s) of the material(s). Put the technical name(s) in parentheses in association with the proper shipping name.

6

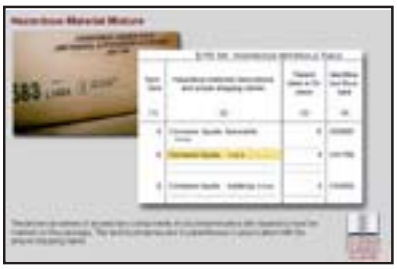

If required, the technical names must be marked on the package when the hazardous material is a mixture or solution of two or more hazardous materials. Identify the technical names of at least two components most predominant to the hazards. Place the technical names in parentheses in association with the proper shipping name.

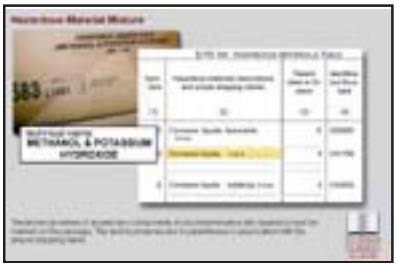

The material being shipped is a mixture or solution of a corrosive liquid and a toxic (poisonous) liquid. Remember to check Column 1 of the HMT. Corrosive liquid, toxic, n.o.s. has a “G” in Column 1 of the HMT.

7

This technical name marking requirement also applies to all shipping descriptions for Division 6.1 material in PG I and PG II, or Division 2.3 material, when the proper shipping name does not specifically identify the poisonous or toxic material. The shipper must include the technical name in parentheses.

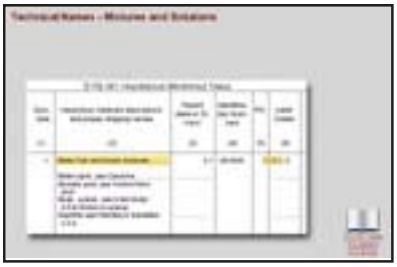

Look at the proper shipping name, Motor fuel anti-knock mixtures in this graphic of the HMT. Notice the proper shipping name does not disclose or name the material that makes Motor fuel anti-knock mixtures a poison. Therefore, the technical name of that material must be added in association with the marked proper shipping name.

Quick Review #1

Instructions: Select the term that correctly completes the statement.
Terms:

A. technical	B. two	C. shipping name	D. three
E. approved	F. required	G. parentheses	

Statements:

_____1. "Marking" refers to the required information on outer packagings of hazardous materials. This includes a proper shipping name, ID No., specification or UN marks plus _____ instructions and/or cautions.

_____2. Non-bulk packages of hazardous materials must be marked with the proper _____ and ID No., preceded by the appropriate letters, "UN" or "NA".

_____3. Mark the technical name(s) of the material(s) in _____ in association with the proper shipping name when a "G" is shown in Column 1 of the HMT.

_____4. For shipping descriptions that show the letter "G" in column 1 of the HMT, mark the package with the technical name. For mixtures and solutions containing two or more hazardous materials, the name of at least _____ of the components most predominant to the hazard(s) must be included. Place the technical names in parentheses in association with the proper shipping name.

_____5. Packages of poisonous material in Division 6.1, PG I and II, or Division 2.3 material, must be marked with the _____ name of the material either in the proper shipping name or marked in parentheses in association with the proper shipping name.

8

Packages containing only limited quantity or ORM-D materials are not required to have the ID No. marked on the package when not packed with other hazardous materials.

9

Large Quantities (4,000 kilograms or 8,820 lbs, or more) of a single hazardous material in non-bulk packages that have the same shipping name and ID number, which are loaded at one loading facility require that the transport vehicle or freight container be properly marked with the ID number on each side and each end. This does not apply if any other material, hazardous or non-hazardous, is carried in the freight container or transport vehicle.

10

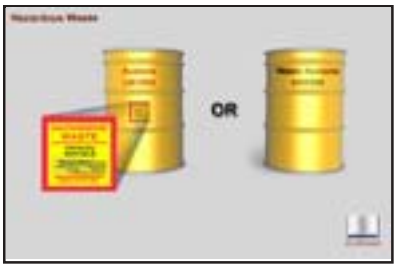

If a package of hazardous waste has the EPA marking in 40 CFR 262.32 shown, the word “waste” need not be repeated on the package. Without this EPA marking, the word “waste” is required to be marked on the package before the proper shipping name.

11

“Inhalation Hazard” must be marked on any package containing material that meets the criteria of a “Poison-Inhalation Hazard” or “Toxic-Inhalation Hazard” material. The “Inhalation Hazard” marking must appear in association with the labels or placards and may be marked on either the packages or on the label or placard.

12

All markings must be durable, in English, and printed on or affixed to the surface of the package or on a label, tag or sign. They must stand out, unobscured by labels or other matter. Place markings on a background of sharply contrasting color. The required markings must be located away from any other markings, such as advertising, that could reduce the effectiveness of the HMR markings.

13

With two exceptions, every non-bulk package of hazardous material offered for transportation must be marked with the name and address of the consignee or consignor; that is, the name and address of the shipper or receiver of the package.

14

Abbreviations that appear in Column 2 of the HMT may be used in marking of packages. The abbreviation “ORM” may be used for “Other Regulated Materials.”

Quick Review #2

Instructions: Your task is to complete these statements based on the information presented in this topic. Complete each of the statments by filling in the term that properly completes the statement.

ACROSS

1. Mark _____ on packages containing material that meets the "Poison-Inhalation Hazard" or "Toxic-Inhalation Hazard" criteria.

2. No Identification Number is needed on _____ or ORM-D packages, unless packed with other hazardous materials.

DOWN

1. All markings must be durable, in _____, and printed or affixed to the package surface or on a label, tag or sign. They must be placed on a sharply contrasting background. Required markings must be unobscured and located away from any other markings.

2. Mark the word _____ before the proper shipping name on all packages of hazardous waste, unless the package bears the EPA "hazardous waste" marking.

3. Every non-bulk package of hazardous material offered for transportation must be marked with the name and _____ of the consignee or consignor except when transported by highway and not transferred to another carrier, and when the entire contents of a carload, truckload, or freight container is shipped.

We will now do Student Activity M&L-1A&B and M&L-2A&B. Please open your manual to Student Activity M&L-1A&B, pages 28-30, and M&L-2A&B, pages 31-33.

15

Arrows may only be used for indicating the proper orientation of the package. Some exceptions to these requirements will be presented. Click on the buttons to learn more.

16

Non-bulk combination packages and overpacks with inside packagings of liquid hazardous materials must be packed with the closures in an upright position. Packages and overpacks must be marked with package orientation arrows on two opposite vertical sides to indicate the correct upright direction.

17

Packages containing a Class 3 material (in inner packagings of one liter or less) and packaged as Ltd. Qty. or consumer commodity do not require orientation arrows for land transportation.

18

When packages containing a Class 3 material are shipped by air as a consumer commodity or Limited Quantity, they do not need package orientation arrows if the inner packaging contains 120 ml (4 fluid oz.) or less, or there is sufficient absorption material packed between the inner and outer packaging to completely absorb the liquid.

Quick Review #3

Instructions: Select the correct answer from the choices provided.

Combination packages and overpacks containing inner packagings of granular hazardous materials must be packed with the closures upright.

A. True
B. False

19

A non-bulk package containing an ORM-D material must have the appropriate ORM-D marking plainly, durably, and legibly displayed. The marking should appear immediately following or below the proper shipping name, on at least one side or end of the packaging. ORM-D-AIR designates an ORM-D that has been prepared according to 173.27 for shipment by air. The ORM-D marking must be placed within a rectangle that is approximately 6.3 mm (.25 in) larger on each side than the ORM-D designation. When the ORM-D marking, including the proper shipping name, cannot be affixed to the package surface, it may be displayed on an attached tag.

Quick Review #4

Instructions: Select the best answer from the four choices provided.

Marking the ORM-D designation in a rectangle following or below the proper shipping name on a non-bulk package _____ that the package is in proper condition for transportation. The marking certification does not take the place of the shipping paper certification, if required.

A. validates
B. negates
C. ensures
D. certifies

20

A non-bulk package containing a hazardous substance may or may not identify the hazardous substance by name in the proper shipping name. If not, the package must bear one of the following descriptions:

1. the name of the hazardous substance as listed in Appendix A to the HMT;
2. the name of the two hazardous substances with the lowest RQ, if the material contains two or more hazardous substances; or
3. the waste code (for example D001) for hazardous waste if appropriate.

The appropriate description must be marked on the package in parentheses in association with the proper shipping name. Properly labeled radioactive material is excepted from this requirement.

Quick Review #5

Instructions: Select the correct answer from the choices provided.

When the proper shipping name does not identify the hazardous substance by name, the name of the hazardous substance must be marked on the non-bulk package. This information must be in parentheses in association with the proper shipping name.

A. True
B. False

21

Each non-bulk package that contains a hazardous substance must be marked with the letters "RQ." Place the "RQ" in association with the proper shipping name. Therefore, the proper shipping name is "Environmentally hazardous substances, n.o.s., RQ (Cupric acetate)." It is not necessary to mark the amount of the RQ on the package. Let's assume you have a package containing 45.4 kg (100 lbs.) of Cupric acetate, whose proper shipping name is "Environmentally hazardous substances, liquid, n.o.s." "Cupric acetate" is listed in Appendix A to the HMT and the reportable quantity (RQ) is 45.4 kg (100 lbs.) Since the cupric acetate in your package equals the RQ for that material, you have a hazardous substance. You must mark the package to communicate this information. "Cupric acetate" is not listed in the HMT. The required marking for the proper shipping name is "Environmentally hazardous substance, liquid, n.o.s." In association with the proper shipping name, you must mark the name of the hazardous substance, Cupric acetate, in parentheses.

Quick Review #6

Instructions: Select the best answer from the four choices provided.

Non-bulk packages of hazardous substances must be marked with the letters _____ in association with the proper shipping name.

A. QT
B. RQ
C. HM
D. HS

We will now do Student Activity M&L-3 and M&L-4. Please open your manual to Student Activity M&L-3, pages 34-35, and M&L-4, pages 36-37.

22

In this part of the Marking and Labeling Module, we will discuss labeling requirements for packages, overpacks and freight containers.

23

The term “label” as used in the HMR refers to a prescribed hazard warning notice. Labels are applied to the outside of shipping containers of hazardous materials. Labels identify the primary and subsidiary hazards specific to materials and may give information about handling precautions and prohibitions as well. Labels must be at least 100 mm (3.9 inches) on each side.

24

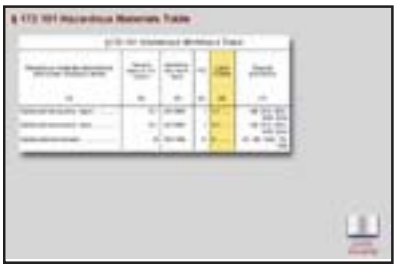

Column 6 of the HMT contains a listing of the label codes for each hazardous material associated with the proper shipping name and hazard class. The initial step in determining appropriate labeling requirements is to check Column 6 of the HMT for any required label(s).

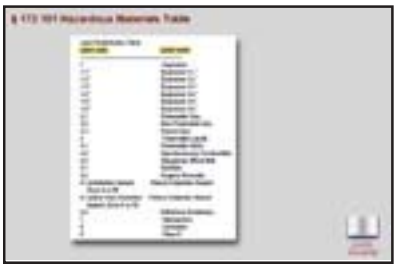

Next, go to the Label Substitution Table in 172.101(g) to determine the meaning of the codes.

25

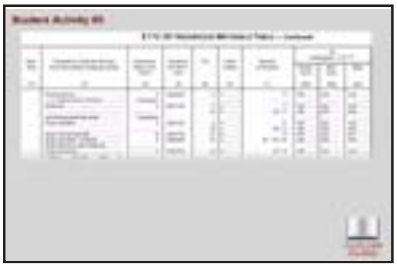

Some sections of the Hazardous Materials Regulations provide exceptions to labeling requirements. In those cases, even though the HMT specifies a label or labels, labeling is not required.

Find the proper shipping name “Butyl acetates” in this graphic of the HMT.

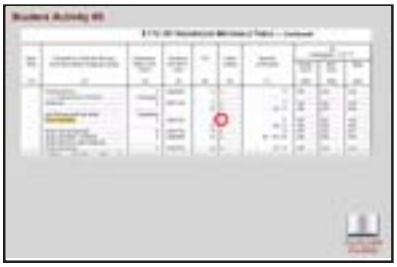

Notice, in Column 6, the Label code is 3.

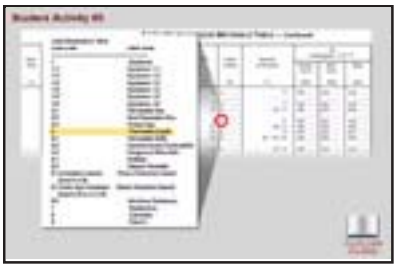

The table in 172.101(g) indicates that a “flammable liquid” label is required.

Now go to Column (8A), the Exceptions Column. Notice there is an exception provided in 173.150. Next, click on the reference link to view 173.150 “Exceptions for Class 3 (flammable) and (combustible liquids)” to learn more about these exceptions. 173.150(b) provides an exception from labeling for these types of materials, unless the shipment is offered for transportation by air.

We will now do Student Activity M&L-5. Please open your manual to Student Activity M&L-5, pages 38-39.

Quick Review #7

Instructions: Select the correct answer from the choices provided.

Labels identify the primary and subsidiary hazards of materials and are applied to the outside of packages of hazardous materials.

A. True
B. False

26

Unless otherwise provided, anyone offering for transportation a package, overpack or freight container of hazardous material must label it, when required.

Section 172.400(a) states conditions when labeling is not required. Additional labeling exceptions are found in other sections of the regulations. Click on each button to learn more about these requirements.

27

Unless excepted, a package of hazardous materials may not be offered or transported unless properly and accurately labeled. The hazard warning labels must accurately represent the hazard of the material in the package.

No person may offer and no carrier may transport a package of hazardous materials that displays markings or labels that could be confused with, or be in conflict with the labels prescribed by the HMR.

28

The labels required by the HMR are normally used for domestic shipments, but may be used for international shipments in most cases. Several international organizations prescribe labeling requirements that may be used in addition to or in place of domestic labels.

29

If a shipment is being transported by water, the International Maritime Organization (IMO)/ International Maritime Dangerous Goods (IMDG) Code labels may be used in place of or in addition to those required by the HMR.

30

If a shipment is being transported by air, the International Civil Aviation Organization (ICAO) Technical Instructions' labels may be used in place of or in addition to those required by the HMR.

31

Shipments of hazardous materials being transported from Canada may display labels that conform to Canadian regulations for the Transportation of Dangerous Goods (TDG). The TDG labels may be used in place of or in addition to those required by the HMR.

32

Hazardous materials warning labels used in the United Nations Recommendations document "Recommendations on the Transport of Dangerous Goods" may also be used in place of labels required by the HMR. Labels used in the United States, Canadian, IMO and IMDG and ICAO regulations are generally based on the United Nations Recommendations although Canada has some label designs that vary from the UNR.

33

Labels may be affixed to packages even when not required by the HMR, provided each label accurately represents a hazard of the hazardous material in the package.

34

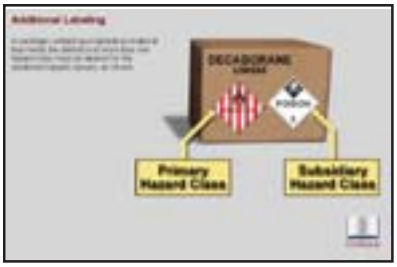

A package containing a hazardous material that meets the definition of more than one hazard class must be labeled for the additional hazard classes, as shown. Subsidiary labels in effect on September 30, 2001 may be used domestically by rail and highway transportation until October 1, 2005. Subsidiary labels are the same design as primary labels with the number indicating the hazard class in the lower corner. Take a moment now to look at 172.402 of the HMR to review additional labeling requirements.

35

Please find the proper shipping name "Allyl Chloride," a Class 3 (flammable liquid), in the HMT.

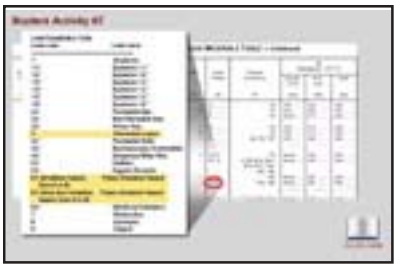

Column 6 of the HMT requires that two labels be affixed: 3 (FLAMMABLE LIQUID) and 6.1 (POISON or TOXIC).

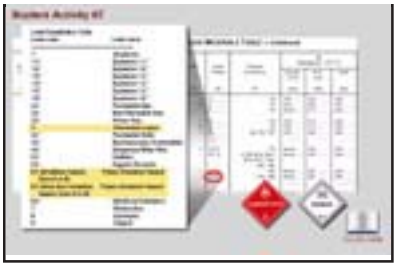

Class 3 (flammable liquid) is the primary hazard class; Div. 6.1 (poison or toxic) is the subsidiary hazard.

Therefore, both labels must be displayed.

36

Hazardous materials shipped by air and authorized for cargo aircraft only must have the “CARGO AIRCRAFT ONLY” label affixed to the package. The label warns those who handle the package that it may not be transported on a passenger carrying aircraft.

37

Please find the proper shipping name “Potassium phosphide,” and determine the labeling requirements.

For this material, Column 6 of the HMT requires two hazard warning labels, 4.3 (Dangerous When Wet) for the primary hazard and 6.1 (Poison or Toxic) for the subsidiary hazard.

In addition, Column (9A) forbids Potassium phosphide aboard a passenger carrying aircraft. Therefore, a “CARGO AIRCRAFT ONLY” label must also be affixed to the package, if transported by air.

So, when transported by air, a package of Potassium phosphide must have three labels affixed: two hazard warning labels, and one prohibition label.

38

Sometimes two or more hazardous materials are placed in the same outside container or overpack. When this is done, the outside container or overpack must be labeled for each class of material contained within.

39

There are three authorized label modifications:
1. For Classes 1, 2, 3, 4, 5, 6, and 8, text is not required if the class number is on the label.
2. For a package containing “Oxygen, compressed” or “Oxygen, refrigerated liquid,” the Oxidizer label may be modified. It may display the word “Oxygen” instead of “Oxidizer” and use Class “2” instead of Division “5.1.” The modified Oxidizer label may be used in place of the “Non-Flammable Gas” and “Oxidizer” labels.
3. The Poison label may be modified to read “Toxic” instead of “Poison.” If the poison is in PG III, PG III may be on the label instead of “Poison” or “Toxic”.

40

The label may be printed on or affixed to a tag or by other suitable means when the package contains no radioactive material and the label is larger than the package; or the package surface is such that a label cannot be affixed; or when the package is a cylinder.

41

When labels are required, they must be on a background of contrasting color or have a dotted or solid line outer border. Labels may not be obscured by markings or attachments. When two or more labels are required, they must also be displayed next to each other.

42

Two labels on at least two sides or ends, excluding the bottom, must appear on each package or overpack having a volume of 1.8 m^3 (64 cubic feet) or more; or on each non-bulk package of radioactive material;

or on freight containers or aircraft unit load devices having a volume of between 1.8 m^3 (64 cubic feet) and 18 m^3 (640 cubic feet). At least one of the required labels must be displayed on or near the closure for the freight container.

43

Unless excepted, each required hazardous material warning label affixed to or printed on a package must be at least 100 mm or 3.9 inches on each side. The labels must be durable and weather resistant. A label may contain form information including the name of the maker of the product. This information must be printed outside the solid line inner border in 10-point type or smaller.

44

All explosives labels must comply with 172.407 and 172.411. For Explosives 1.1, 1.2, or 1.3, replace the double asterisks with the appropriate division number and the compatibility group letter. For Explosives 1.4, 1.5, or 1.6, replace the single asterisk with the appropriate compatibility group letter.

Quick Review #8

Instructions: Your task is to complete these statements based on the information presented in this topic. Complete each of the statments by filling in the term that properly completes the statement.

ACROSS

1. Display labels on contrasting color _____ or with an outer border and unobscured by other markings or attachments.
2. No markings or labels may be displayed on hazardous materials packages that could be confused with or _____ with the markings and labels prescribed by the HMR.
3. The required labels must be _____ on or affixed to the surface of the package near the marked proper shipping name.
4. Unless excepted, all packages of hazardous materials must be _____ and accurately labeled.
5. Unless an exception or exemption applies, anyone _____ hazardous materials for transportation must label the package in accordance with the HMR.
6. Even if not required, a label may be affixed to a package provided the label correctly represents the _____ of the material in the package.

DOWN

1. A package or an overpack containing two or more hazard classes must be labeled for each hazard _____.
2. Label hazardous material packages for _____ hazard class the material meets.
3. The labels required by the HMR are normally used for _____ shipments.
4. A minimum of _____ labels on at least two sides or ends are required to mark packages or containers containing hazardous materials.
5. The use of the word "Toxic" instead of "Poison" on the Poison label is one of the three authorized label _____.
6. "CARGO AIRCRAFT ONLY" labeled packages are prohibited from being transported on _____ - carrying aircraft.
7. If the label is _____ than the package, and the package contains no radioactive material, the warning label may be placed on a tag.

45

Before you offer a shipment of hazardous material, be sure the packages are properly marked and labeled. If you are the carrier, know what you are accepting for transportation. If the hazardous material is not properly marked and labeled or if the packages are not intact, do not accept the shipment!

46

If you are an enforcement officer, examine the package, overpack, freight container, or transport vehicle carefully. If not properly marked or labeled, take appropriate action. Shipments complying with the HMR will make the transportation of hazardous materials safer for everyone, including you.

Marking and Labeling Summary

Marking (Non-Bulk)

Proper Shipping Name ..... 172.301(a)

Identification Number ..... 172.301(a)

Technical Name ..... 172.301(b)

Consignor/Consignee ..... 172.301(d)

Authorized Abbreviations 172.308

Package Orientation Arrows 172.312

Poison-Inhalation Hazard (or Toxic-Inhalation Hazard) 172.313

ORM-D 172.316

Hazardous Substance 172.324

Labeling (Non-Bulk)

General Labeling Requirements 172.400

Labeling Exceptions 172.400a

Prohibited Labeling 172.401

Additional Labels 172.402

Mixed/Consolidated Packaging 172.404

Authorized Label Modifications 172.405

Placement of Labels 172.406

Label Specifications 172.407

Compliance Checklist

Marking	Violation	Reference
1. Shipping name		172.301(a)
2. Identification Number		172.301(a)
3. Technical Name		172.301(b)
4. Exemption Number		172.301(c)
5. General Requirements		172.304
In English		172.304(a)(1)
Not Obscured		172.304(a)(2)-(4)
6. Name/Address of Consignee (or Consignor)		172.301(d)
7. Radioactive		172.310(a)
8. Orientation Arrows (for Liquid HM)		172.312(a)-(b)
9. Inhalation Hazard		172.313(a)
10. Poison or Toxic (non-bulk plastic packagings)		172.313(b)
11. ORM-D		172.316
12. Explosive “EX” marking		172.320
13. Marine Pollutants		172.322
14. Hazardous Substances		172.324
15. Overpack		173.25(a)
16. Packaging ID Codes		178.502-503
17. Prohibited Marking		172.303

Labeling	Violation	Reference
1. Label Codes (Col. 6)		172.400(a)-(b)
2. Subsidiary hazards		172.402(a)
3. Exceptions		172.400a
4. Class Numbers on labels		172.402(b)
5. CARGO AIRCRAFT ONLY		172.402(c)
6. Mixed/consolidated packages		172.404
7. Prohibited labeling		172.401
8. Radioactive Material		172.403
9. Placement		172.406(a)-(f)

Student Activity

Marking Student Activity

Student Activity M&L-1, A&B

To the Instructor

The objective of this student activity is to provide a practical marking exercise. The student is provided statements of facts regarding hazardous materials shipments and graphics of packages or packaging on Student Activity M&L-1A&B.

Directions to Student(s)

Student ActivityM&L-1A&B have statements of facts about specific hazardous materials. Determine the required markings thus far addressed in this module. Write or print them on the picture of the appropriate packaging – drum, box, container.

Self-Evaluation

This student activity will evaluate your skill and facility in use of the Hazardous Materials Regulations (HMR) in determining correct marking requirements. When you have completed and checked your work for accuracy, review the student activity with the instructor.

Marking Student Activity

Student Activity M&L-1A

The Carson Manufacturing Company of 555 Maple Lane, Burbank, California, 90036, is shipping to the Johnstone Distribution Company of 10 Pine Street, New Orleans, Louisiana, 70122, 100 kg of Carbamate pesticides, liquid, toxic, 6.1, PG I, in a metal drum. The shipment will be transferred from one motor carrier to another. On the drum shown below, write in all required markings for the shipment thus far addressed in this module.

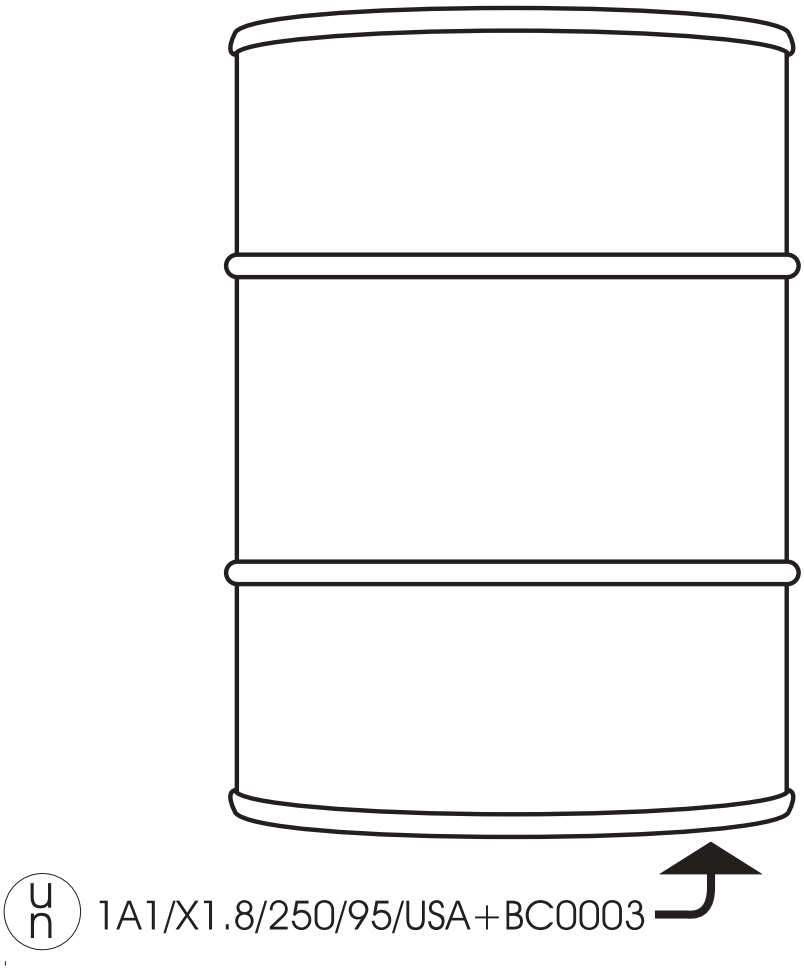

Marking Student Activity

Student Activity M&L-1B

The Superior Products Company of 889 Chestnut Street, Los Angeles, California, 90040, is shipping to the Guildron Chemical Company of Denver, Colorado, 80209, a drum containing 60 kg of a mixture of “Dioxane” a Class 3, and “Acetyl bromide” a Class 8 under the proper shipping name Flammable liquids, corrosive, n.o.s. The shipment will be transported by ABC Truck Lines, Inc., and transferred to Interstate Truck Systems for delivery. On the drum shown below, write in all required markings for the shipment thus far addressed in this module.

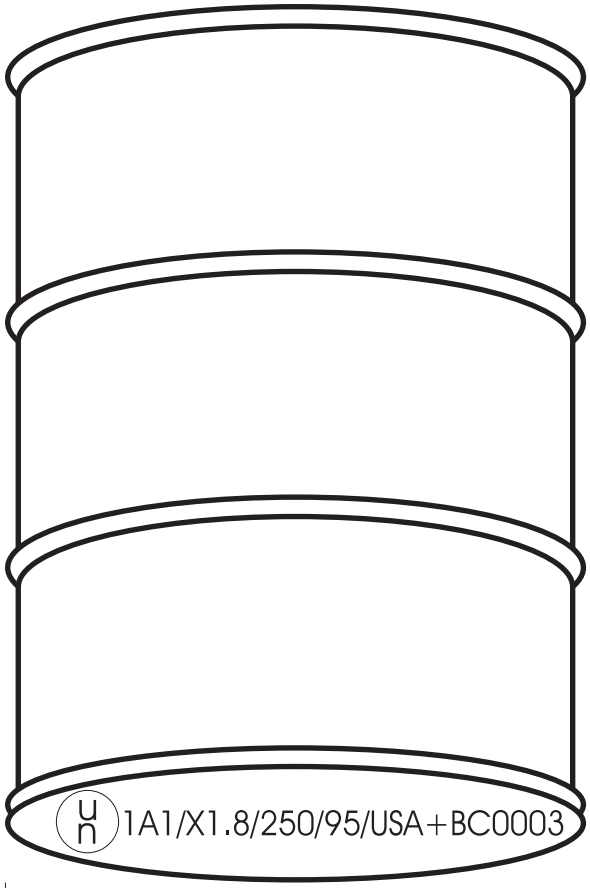

Marking Student Activity

Student Activity M&L-2, A&B

To the Instructor

The objective of this student activity is to provide a practical marking exercise. The student is provided statements of facts regarding hazardous materials shipments and graphics of packages or packagings on Student Activity M&L-2A&B.

Directions to Student(s)

Student Activity M&L-2A&B have statements of facts about specific hazardous materials. Determine the required markings thus far addressed in this module and write or print them on the appropriate picture of the packaging – drum, box, container.

Self-Evaluation

This student activity will evaluate your skill and facility in use of the HMR in determining correct marking requirements. When you have completed and checked your work for accuracy, review the student activity with the instructor.

Marking Student Activity

Student Activity M&L-2A

The M&L Chemical Company of 333 Carroll Lane, Grand Rapids, Michigan, 49503, is shipping to the Martin Manufacturing Company of Atlanta, Georgia, 30314, 50 kg of "Benzyl Chloride", a Class 6.1 material in a metal drum. The material is listed in Appendix A as a hazardous substance. The shipment will be transported by highway and will be transferred from one motor carrier to another. On the drum below, write in all the required markings for the shipment thus far addressed in this module.

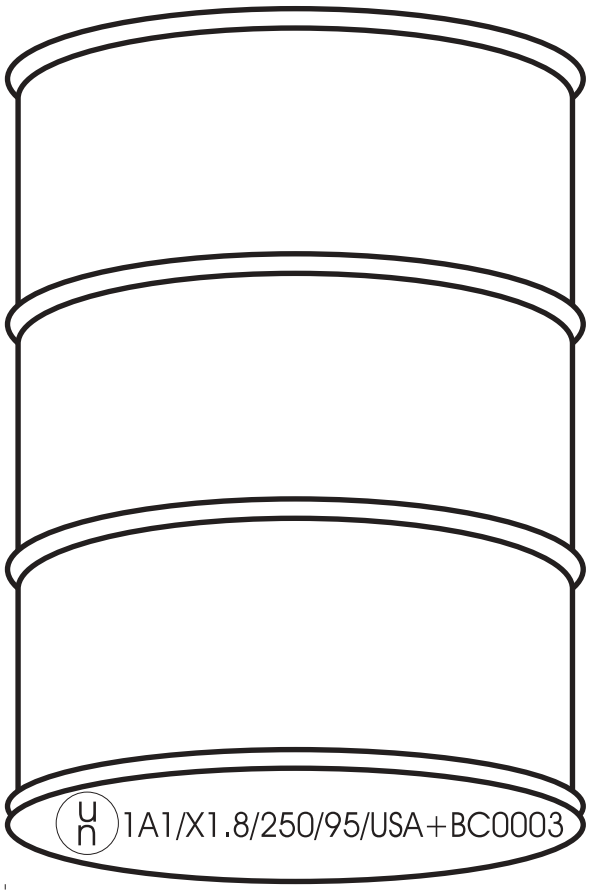

Marking Student Activity

Student Activity M&L-2B

The Winerlose Chemical Company of 567 Park Avenue, New York City, New York, 10021, is shipping to the Newhouse Companies of Oklahoma City, Oklahoma, 73129, 600 fiberboard boxes containing “Hexanes”, a Class 3. The entire shipment will be transported as a carload lot and will go direct from the shipper to the customer. On the fiberboard box shown below, write in all required markings for the shipment thus far addressed in this module.

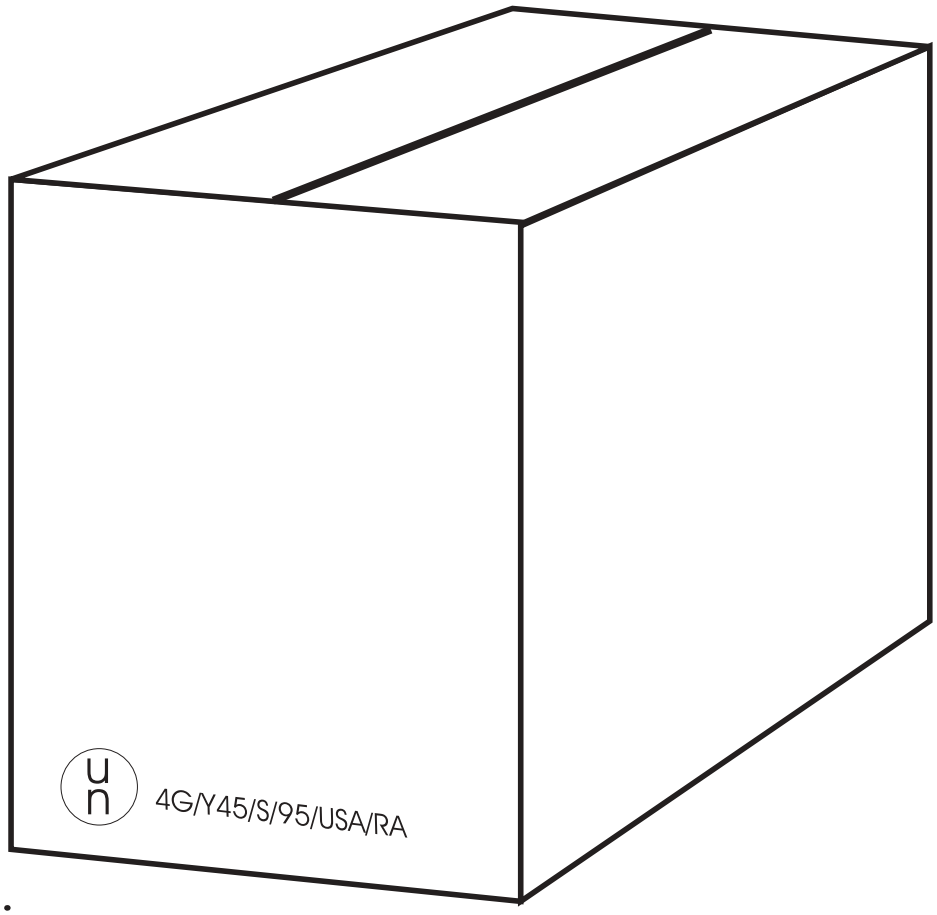

Marking and Labeling Student Activity

Student Activity M&L-3

To the Instructor

The objective of this student activity is to provide a practical marking and labeling exercise. The student is provided a statement of facts regarding hazardous materials shipments and a graphic of package or packagings on Student Activity M&L-3.

Directions to Student(s)

Student Activity M&L-3 has a statement of facts about specific hazardous material. Determine the required markings and labels thus far addressed in this module and write or print them on the graphic of the packaging – drum, box, container.

Self-Evaluation

This student activity will evaluate your skill and facility in use of the HMR in determining the correct marking and labeling requirements. When you have completed and checked your work for accuracy, review the student activity with the instructor.

Marking and Labeling Student Activity

Student Activity M&L-3

The L.D. Frost Company of 123 Cowboy Road, Dallas, Texas, 75215, is shipping to the General Electric Company of Kansas City, Missouri, 64143, 150 fiberboard boxes (4.5 kg each) containing "Methyl acetate", a Class 3. The shipment is packaged and offered as a limited quantity (Ltd. Qty.) and will be transferred from one motor carrier to another. On the box below, write all the required markings and labels for the shipment thus far addressed in this module.

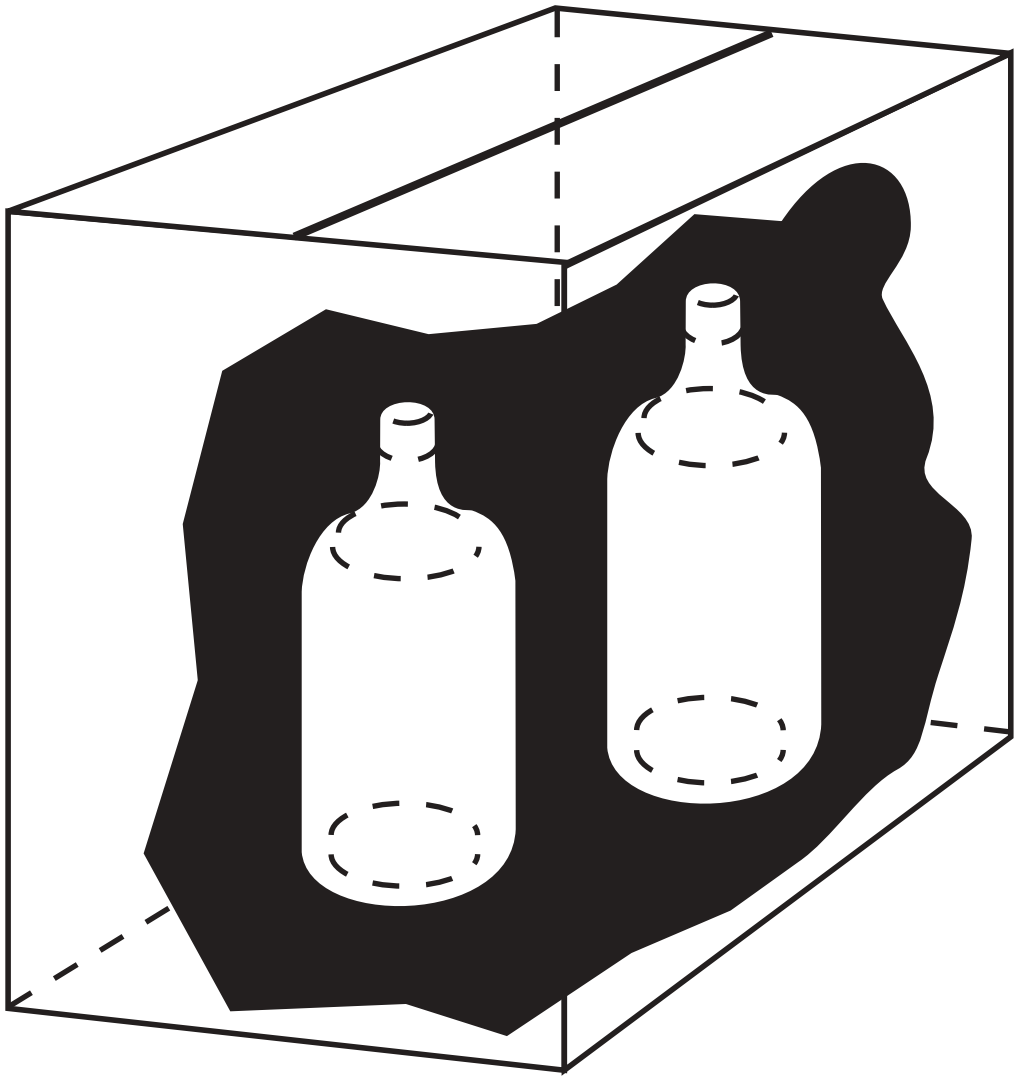

Marking and Labeling Student Activity

Student ActivityM&L-4

To the Instructor

The objective of this student activity is to provide a practical marking and labeling exercise. The student is provided a statement of facts regarding hazardous material shipment and a graphic of package or packaging on Student Activity M&L-4.

Directions to Student(s)

Student Activity M&L-4 has a statement of facts about specific hazardous material. Determine the required markings and labels thus far addressed in this module and write or print them on the graphic of the packaging — drum, box, container.

Self-Evaluation

This student activity will evaluate your skill and facility in use of the HMR in determining the correct marking and labeling requirements. When you have completed and checked your work for accuracy, review the student activity with the instructor.

Marking and Labeling Student Activity

Student Activity M&L-4

The Scott Manufacturing Company of Jackson, Mississippi, 39307, is shipping to the Grant Chemical Company, Inc., of 3 Viking Parkway, Duluth, Minnesota, 55811, 50 kg of a mixture of "Isobutyl formate" a Class 3 material, and "Methyl parathion," a Division 6.1 material, in a drum under the proper shipping name Toxic Liquid, flammable, organic, n.o.s. The shipment will be transported from one motor carrier to another. On the drum below, write in all required markings and labels for the shipment thus far addressed in this module.

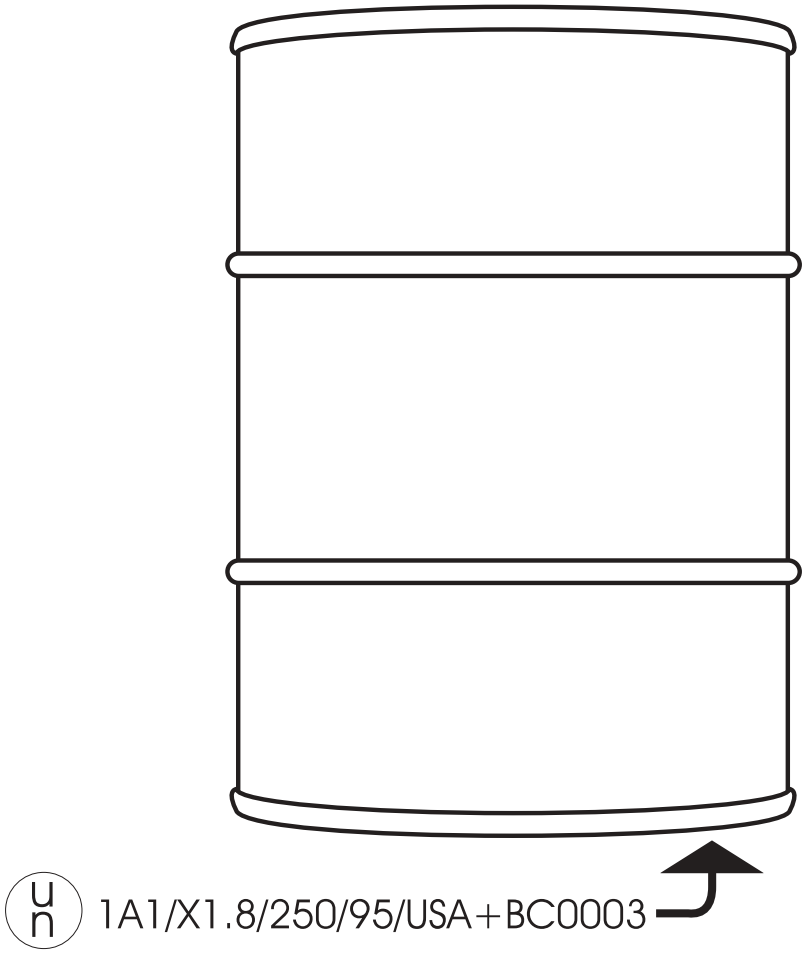

Marking and Labeling Student Activity

Student Activity M&L-5

To the Instructor

The objective of this student activity is to provide a practical marking and labeling exercise. The student is provided a statement of facts regarding hazardous material shipment and a graphic of package or packaging on Student Activity M&L-5.

Directions to Student(s)

Student Activity M&L-5 has a statement of facts about specific hazardous material. Determine the required markings and labels thus far addressed in this module and write or print them on the graphic of the packaging — drum, box, container.

Self-Evaluation

This student activity will evaluate your skill and facility in use of the HMR in determining the correct marking and labeling requirements. When you have completed and checked your work for accuracy, review the student activity with the instructor.

Marking and Labeling Student Activity

Student Activity M&L-5

The Heritage Company, Inc., of 4 Yellow Brick Road, Willard, Kansas, 05815, is shipping to the Atlas Corporation of Honolulu, Hawaii, 96815, 14 kg of “Rubidium,” a Division 4.3, Dangerous when wet material, in a wooden box. The shipment will be transported by highway and by air. On the wooden box shown below, write in all required markings and labels for the shipment addressed in this module.

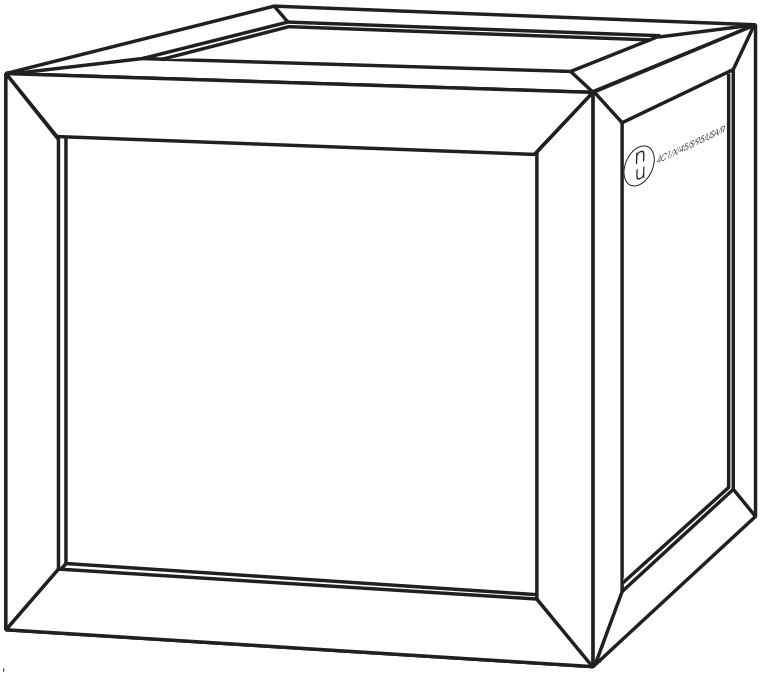

Module 3 Test

1. Marking refers to placing information on the outside of the shipping container, such as _____.

A. proper shipping name of the material
B. identification number
C. other descriptive information
D. all of the above

2. Required package markings must be in English.

A. True
B. False

3. When two or more different labels are required, they must be displayed _____.

A. on both ends of the package
B. three inches apart
C. next to each other
D. none of the above

4. The following abbreviation(s) may be used in a "proper shipping description" marking _____.

A. AMMO
B. Blk. Pwd.
C. ORM
D. Auto. Btry.

5. Referring to Column 6 of the Hazardous Materials Table and 172.101(g), indicate what label(s), if any, is/are specific for Liquefied petroleum gas.

A. Poison
B. Non-Flammable Gas
C. Flammable Gas
D. Corrosive and Poison Inhalation Hazard

6. A label is not required on a _____.

A. compressed gas cylinder permanently mounted on a transport vehicle
B. non-bulk package containing combustible liquid
C. package containing an ORM-D not packaged with any other hazard class requiring labels.
D. all of the above

7. Identification numbers are not required to be marked on packages containing limited quantities (Ltd. Qty.)

A. True
B. False

8. A material classed as a Division 5.1, that also meets the definition of a Class 8, PG II material, shall be labeled “OXIDIZER” and “CORROSIVE”.

A. True
B. False

9. For a package of Benzene, the hazard class must be marked on the outside of the package.

A. True
B. False

10. Labeling refers to placing a warning notice specific to the hazard class and/or the handling precautions for the material on the outside of the shipping container.

A. True
B. False

11. A package that meets the criteria of “Poison-Inhalation Hazard” must be marked _____.

A. “Poison-Inhalation Hazard” on two sides
B. “Inhalation Hazard”
C. “Danger-Inhalation Hazard”
D. “Toxic-Poison Inhalation Hazard”

12. A non-bulk package containing a hazardous substance that meets or exceeds the reportable quantity per package must be marked _____.

A. H.S.
B. H.M.
C. RQ
D. RQ, H.S.

13. A package has a “DANGEROUS WHEN WET” label displayed. That means _____.

A. the material is combustible
B. the material is corrosive
C. don’t ship during inclement weather
D. the material is incompatible with water

14. A Class 3, PG I substance that also meets the definition of a 6.1, PG II substance must be labeled _____.

A. “POISON LIQUID” and “FLAMMABLE”
B. “FLAMMABLE” and “POISON”
C. “POISON LIQUID” and “FLAMMABLE LIQUID”
D. “FLAMMABLE LIQUID” and “POISON” or “TOXIC”

15. A package containing an ORM-D must be labeled with an ORM label.

A. True
B. False

16. A 4.5 liter package of Methyl fluoride may be transported aboard a cargo-only aircraft without a “CARGO AIRCRAFT ONLY” label.

A. True
B. False

17. Unless excepted, each package of hazardous material must be marked with _____.

A. Proper shipping name
B. Hazard class
C. Identification number
D. A and C

18. A fiberboard box containing a 1.5 liter bottle of Dipentene must be marked with orientation arrows on two opposite vertical sides.

A. True
B. False