2000 Edition

Student Manual

4 Marking and Labeling

HAZARDOUS MATERIALS TRANSPORTATION TRAINING MODULES

U.S. Department of Transportation
Research and Special Programs Administration

Script

Visual	Narrative

1

Module 4 – Marking and Labeling

2

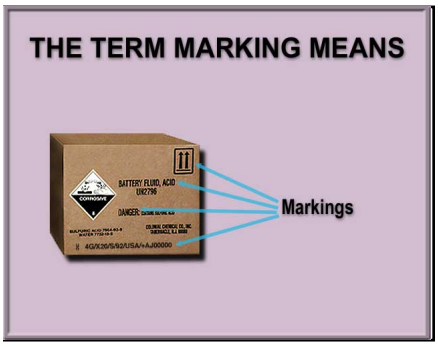

The term marking as used in the HMR, means the required information on an outer package containing hazardous materials. This includes a proper shipping name, identification number (ID No.), specifications or UN marks, plus any required information, instructions and/or cautions.

171.8

STUDENT RESPONSE NOTE 1-2

"Marking" means the required information on outer packagings of hazardous materials. This includes a proper shipping name, ID No., specifications or UN marks plus _____ instructions and/or cautions.

3

Each person who offers a hazardous material for transportation must mark each package, freight container and transport vehicle containing the hazardous material as prescribed in the HMR. Additionally, when required, each carrier that transports a hazardous material shall mark each package, freight container and transport vehicle, as prescribed.

172.300

4

Each person who offers for transportation a hazardous material in a non-bulk packaging must mark the package with the proper shipping name and the assigned ID Number preceded by the letters “UN” or “NA.”

There are exceptions to these requirements, which were addressed in the Packaging Module. There are specific marking requirements for bulk packaging, cargo tanks, tank cars and portable tanks.

172.301(a)

Note: This module assumes that (1) the proper shipping name, ID No., hazard class and packing group were assigned, and (2) the student is able to correctly use the Hazardous Materials Table.

STUDENT RESPONSE NOTE 3-4

Non-bulk packages of hazardous materials must be marked with the _____ _____ and ID No., preceded by the appropriate letters, “UN” or “NA.”

5

Packages containing only limited quantity (Ltd. Qty.) or ORM-D materials are not required to have the ID No. marked on the package, when not packed with other hazardous material.

172.301(a)

STUDENT RESPONSE NOTE 5

No ID No. is needed on _____ or ORM-D packages unless packed with other hazardous materials.

6

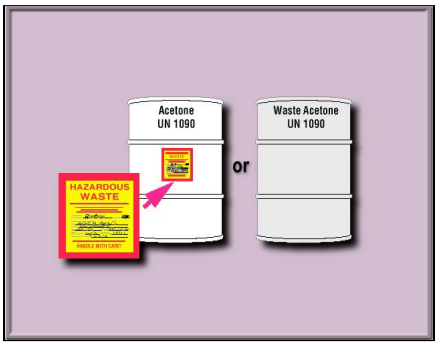

If a package of hazardous waste has the EPA marking in 40 CFR 262.32 shown, the word“waste” need not be repeated on the package. Without this EPA marking, the word “waste” is required to be marked on the package before the proper shipping name.

172.301(a)(2)

STUDENT RESPONSE NOTE 6

Mark the word “_____” before the proper shipping name on all packages of hazardous waste, unless the package bears the EPA “hazardous waste” marking.

7

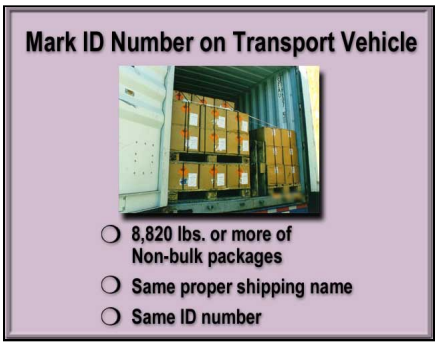

Large Quantities (4000 kg [8,820 lbs] or more) of a single hazardous material in non-bulk packages that have the same shipping name and with ID number and which are loaded at one loading facility require that the transport vehicle or freight container be properly marked with the ID number on each side and each end. This does not apply if any other material, hazardous or non-hazardous, is carried in the freight container or transport vehicle.

172.301(a)(3)

8

Packages containing hazardous materials with proper shipping names that have the letter “G” in Column 1 of the HMT, must be marked with the proper shipping name AND the technical name(s) of the material(s). Put the technical name(s) in parentheses in association with the proper shipping name.

172.101(b)(4); 172.203(k); 172.301(b)

STUDENT RESPONSE NOTE 7-8

Mark the technical name(s) of the material(s) in _____ in association with the proper shipping name when a “G” is shown in Column 1 of the HMT.

9

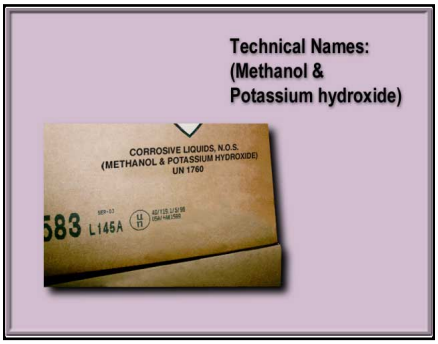

If required, the technical names must be marked on the package when the hazardous material is a mixture or solution of two or more hazardous materials. Identify the technical names of at least two components most predominant to the hazards. Place the technical names in parentheses in association with the proper shipping name.

172.101(b)(4); 172.301(b)

Student Activity

Open your regulations to the HMT and look up the proper shipping name "Corrosive liquids, toxic, n.o.s."

The material being shipped is a mixture or solution of a corrosive liquid and a toxic (poisonous) liquid. Remember to check 172.203(k).

Corrosive liquid, toxic, n.o.s. has a "G" in Column 1 of the HMT. Therefore, the technical names of at least two components most predominant to the hazard(s) must be marked on the package, as shown. Notice that the technical names are in parentheses in association with the proper shipping name.

172.203(k); 172.301(b)

STUDENT RESPONSE NOTE 9

For the shipping descriptions that show the letter "G" in column 1 of the HMT, mark the package with the technical name. For mixtures and solutions containing two or more hazardous materials, the name of at least ___ of the components most predominant to the hazard(s) must be included. Place the technical names in parentheses in association with the proper shipping name.

10

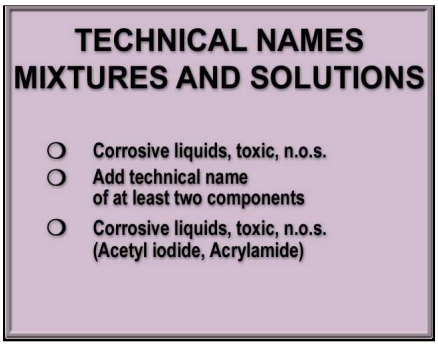

This technical name marking requirement also applies to all shipping descriptions for Division 6.1, PG I and PG II or Division 2.3 material, when the proper shipping name does not specifically identify the poisonous or toxic material. The shipper must include the technical name in parentheses.

172.203(m)(2); 172.301(b)

STUDENT RESPONSE NOTE 10

Packages of poisonous material in Division 6.1, PG I and II, or Division 2.3 material, must be marked with the _____ name of the material either in the proper shipping name or marked in parentheses in association with the proper shipping name.

Student Activity

Open your HMR to the Hazardous Materials Table (HMT). Look up the proper shipping name “Motor fuel anti-knock mixtures.”

Notice the Division is 6.1, PG I. The proper shipping name does not disclose or name the material that makes Motor fuel anti-knock mixtures a poison. Therefore, the technical name of that material must be added in association with the marked proper shipping name.

11

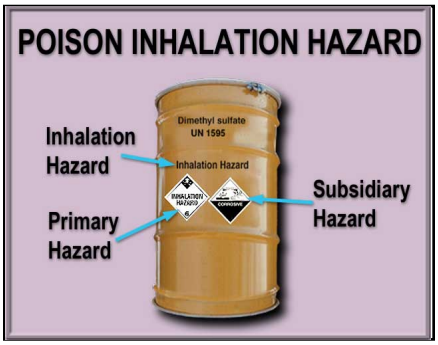

"Inhalation Hazard" must be marked on any package containing material that meets the criteria of a "Poison-Inhalation Hazard" or "Toxic-Inhalation Hazard" material. The "Inhalation Hazard" marking must appear in association with the labels or placards and may be marked on either the packages or on the label or placard.

172.313 (a)

STUDENT RESPONSE NOTE 11

Mark "_____" on packages containing material that meets the "Poison-Inhalation Hazard" or "Toxic-Inhalation Hazard" criteria.

12

All markings must be durable, in English, and printed on or affixed to the surface of the package or on a label, tag or sign.

They must stand out. Place markings on a background of sharply contrasting color, unobscured by labels or other matter.

Locate the required markings away from any other markings, such as advertising, that could reduce the effectiveness of the HMR markings.

172.304(a)(1)-(4)

STUDENT RESPONSE NOTE 12

All markings must be durable, in _____, and printed on or affixed to the package surface or on a label, tag or sign. They must be placed on a sharply contrasting background. Required markings must be unobscured and located away from any other markings.

13

With two exceptions, every non-bulk package of hazardous material offered for transportation must be marked with the name and address of the consignee or consignor; that is, the name and address of the shipper or receiver of the package.

These exceptions are: 1) for packages transported by highway only that will not be transferred from one motor carrier to another; and 2) for packages that are part of a carload lot, truckload lot or freight container load, and the entire contents of the rail car, truck or freight container are shipped from one consignor to one consignee.

172.301(d)(1)-(2)

STUDENT RESPONSE NOTE 13

Every non-bulk package of hazardous material offered for transportation must be marked with the name and _____ of the consignee or consignor except

- when transported by highway and not transferred to another carrier; and
- when the entire contents of a carload, truckload, or freight container is shipped from one consignor to one consignee.

Student Activity

We will now do a work project on marking. Open your Student Manual to Work Project M&L-1, Parts A and B, and follow the directions on page 31. When you have completed and checked your work for accuracy, either review the work project with the instructor or check the answers on pages 49 and 50.

Please pause the presentation to complete this Student Activity.

14

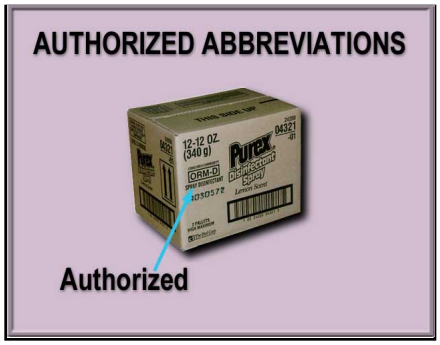

Abbreviations that appear in column 2 of the HMT may be used in marking of packages. The abbreviation “ORM” may be used for “Other Regulated Materials.”

172.101; 172.308

15

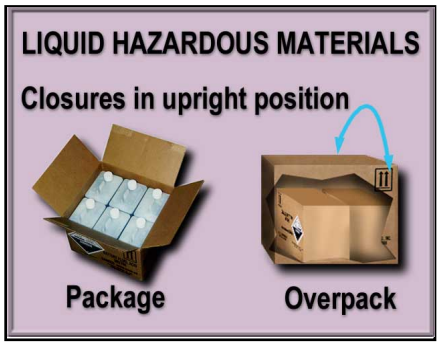

Non-bulk combination packages and overpacks with inside packagings of liquid hazardous material must be packed with the closures in an upright position. Packages and overpacks must be marked with package orientation arrows:

- on two opposite vertical sides
- to indicate the correct upright direction.

172.312(a); 172.312(a)(2)

16

Arrows may only be used for indicating the proper orientation of the package. Some exceptions to these requirements will be discussed in the next two visuals.

172.312(b)

17

Packages containing Class 3 material (in inside packagings of one liter or less) and packaged as Ltd. Qty. or consumer commodity do not require orientation arrows for land transportation.

172.312(c)(3); 173.150(b)-(c)

18

When packages containing Class 3 material are shipped by air as a consumer commodity or Ltd. Qty., they do not need package orientation arrows if the inner packaging contains 120 ml (4 fluid oz.) or less, or there is sufficient absorption material packed between the inner and outer packaging to completely absorb the liquid.

172.312(c)(3); 173.150(b)-(c)

STUDENT RESPONSE NOTE 14-18

Combination packages and overpacks containing inner packagings of _____ hazardous material must be packed with closures (or filling holes) upright.

19

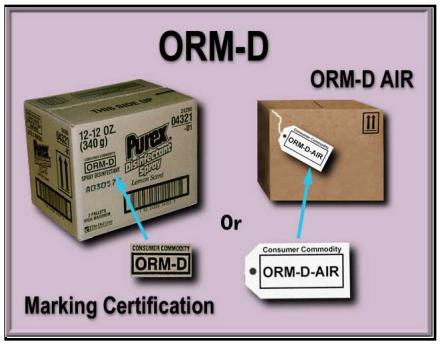

A non-bulk package containing an ORM-D material must have the appropriate ORM-D marking plainly, durably, and legibly displayed. The marking should appear immediately following or below the proper shipping name, on at least one side or end of the packaging. ORM-D-AIR designates an ORM-D that has been prepared according to 173.27 for shipment by air.

The ORM-D marking must be placed within a rectangle that is approximately 6.3 mm (.25 in) larger on each side than the ORM-D designation. When the ORM-D marking, including the proper shipping name, cannot be affixed to the package surface, it may be displayed on an attached tag.

The ORM-D marking is the certification by the shipper that the package is properly prepared and in proper condition for transportation. It does not take the place of the shipping paper certification, if required.

172.304(a); 172.316(a)-(c)

STUDENT RESPONSE NOTE 19

Mark the ORM-D designation in a rectangle following or below the proper shipping name on a non-bulk package. This _____ that the package is in proper condition for transportation. The marking certification does not take the place of the shipping paper certification, if required.

20

HAZARDOUS SUBSTANCES

For environmentally hazardous substances, liquid, n.o.s., mark in parentheses:

- **Name of hazardous substance from Appendix A or**
- **Names of the two hazardous substances with the lowest RQ, if material contains two or more or**
- **waste code**

A non-bulk package containing a hazardous substance may or may not identify the hazardous substance by name in the proper shipping name.

If not, the package must bear one of the following descriptions:

1. the name of the hazardous substance as listed in Appendix A to the HMT; or
2. the name of the two hazardous substances with the lowest RQ, if the material contains two or more hazardous substances; or
3. if appropriate, the waste code (e.g. D001) for hazardous waste.

The appropriate description must be marked on the package in parentheses in association with the proper shipping name.

Properly labeled radioactive material is excepted from this requirement.

172.101, Appendix A; 172.324(a)

STUDENT RESPONSE NOTE 20

When the proper shipping name does not identify the hazardous substance by name, the name of the hazardous substance must be marked on the non-bulk package. This information must be in _____ in association with the proper shipping name.

Student Activity

To demonstrate this requirement, let's assume you have a package containing 45.4 kg (100 lbs.) of Cupric acetate, whose proper shipping name is "Environmentally hazardous substances, solid, n.o.s."

"Cupric acetate" is listed in Appendix A to the HMT and the reportable quantity (RQ) is 45.4 kg (100 lbs.) Since the cupric acetate in your package equals the RQ for that material, you have a hazardous substance. You must mark the package to communicate this information.

"Cupric acetate" is not listed in the HMT. The required marking for the proper shipping name is "Environmentally hazardous substance, solid, n.o.s." In association with the proper shipping name, you must mark the name of the hazardous substance, Cupric acetate, in parentheses.

21

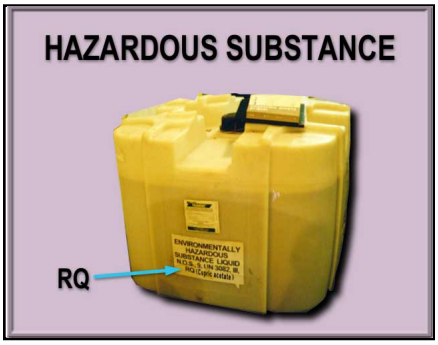

Each non-bulk package that contains a hazardous substance must also be marked with the letters "RQ." Place the "RQ" in association with the proper shipping name. Therefore, the proper shipping name is "RQ, Environmentally hazardous substances, n.o.s., (Cupric acetate)." It is not necessary to mark the amount of the RQ on the package.

172.324(b)

STUDENT RESPONSE NOTE 21

Non-bulk packages of hazardous substances must be marked with the letters "___" in association with the proper shipping name.

Student Activity

Turn to page 34 in your student manual, follow the instructions and complete Work Project M&L- 2, A and B. When you have completed and checked your work for accuracy, review the work project with the instructor or check the answers on pages 51 and 52.

22

In this part of the Marking and Labeling module, we will discuss labeling requirements for packages, overpacks and freight containers.

LABELING

23

The term “label” as used in the HMR, means a prescribed hazard warning notice. Labels are applied to the outside of shipping containers of hazardous materials. Labels identify the primary and subsidiary hazards specific to materials and may give information about handling precautions and prohibitions, as well. Labels must be at least 100 mm (3.9 in.) on each side.

172.400; 172.407

STUDENT RESPONSE NOTE 22-23

Labels identify the primary and subsidiary _____ of materials and are applied to the outside of packages of hazardous materials.

24

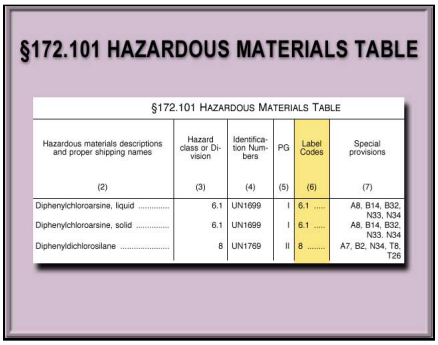

§172.101 Hazardous Materials Table

Hazardous materials descriptions and proper shipping names (2)	Hazard class or Division (3)	Identification Numbers (4)	PG (5)	Label Codes (6)	Special provisions (7)
Diphenylchloroarsine, liquid	6.1	UN1699	I	6.1	A8, B14, B32, N33, N34
Diphenylchloroarsine, solid	6.1	UN1699	I	6.1	A8, B14, B32, N33, N34
Diphenyldichlorosilane	8	UN1769	II	8	A7, B2, N34, T8, T26

Column 6 of the HMT contains a listing of the label codes for each hazardous material associated with the proper shipping name and hazard class. The initial step in determining appropriate labeling requirements is to check Column 6 of the HMT for any required label(s).

172.101, Col. 6

25

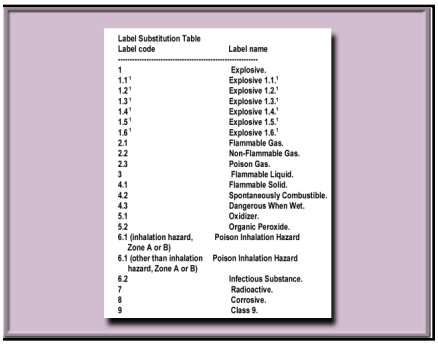

Label Substitution Table

Label code	Label name
1	Explosive.
1.1[1]	Explosive 1.1.[1]
1.2[1]	Explosive 1.2.[1]
1.3[1]	Explosive 1.3.[1]
1.4[1]	Explosive 1.4.[1]
1.5[1]	Explosive 1.5.[1]
1.6[1]	Explosive 1.6.[1]
2.1	Flammable Gas.
2.2	Non-Flammable Gas.
2.3	Poison Gas.
3	Flammable Liquid.
4.1	Flammable Solid.
4.2	Spontaneously Combustible.
4.3	Dangerous When Wet.
5.1	Oxidizer.
5.2	Organic Peroxide.
6.1 (inhalation hazard, Zone A or B)	Poison Inhalation Hazard
6.1 (other than inhalation hazard, Zone A or B)	Poison Inhalation Hazard
6.2	Infectious Substance.
7	Radioactive.
8	Corrosive.
9	Class 9.

Next, go to the Label Substitution Table in 172.101(g) to determine the meaning of the codes.

172.101(g)

26

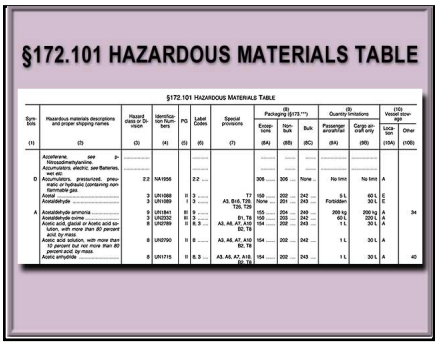

§172.101 HAZARDOUS MATERIALS TABLE

§172.101 HAZARDOUS MATERIALS TABLE

Symbols	Hazardous materials descriptions and proper shipping names	Hazard class or Division	Identification Numbers	PG	Label Codes	Special provisions	(8) Packaging (§173.***) Exceptions	Non-bulk	Bulk	(9) Quantity limitations Passenger aircraft/rail	Cargo aircraft only	(10) Vessel stowage Location	Other
(1)	(2)	(3)	(4)	(5)	(6)	(7)	(8A)	(8B)	(8C)	(9A)	(9B)	(10A)	(10B)
	Azoferene, see P-Nitrosodimethylaniline.	.....			.....		.....	.....	.....	.....	.....		
	Accumulators, electric, see Batteries, wet etc.	.....			.....		.....	.....	.....	.....	.....		
D	Accumulators, pressurized, pneumatic or hydraulic (containing non-flammable gas).	2.2	NA1956		2.2		306	306	None ...	No limit	No limit	A	
	Acetal	3	UN1088	II	3	T7	150	202	242	5 L	60 L	C	
	Acetaldehyde	3	UN1089	I	3	A3, B16, T20, T25, T29	None ...	201	243	Forbidden	30 L	C	
A	Acetaldehyde ammonia	9	UN1841	III	9		155	204	240	200 kg	200 kg	A	34
	Acetaldehyde oxime	3	UN2332	III	3	B1, T8	155	203	242	60 L	220 L	A	
	Acetic acid, glacial or Acetic acid solution, with more than 80 percent acid by mass	8	UN2789	II	8, 3 ...	A3, A6, A7, A10, B2, T8	154	202	243	1 L	30 L	A	
	Acetic acid solution, with more than 10 percent but not more than 80 percent acid by mass	8	UN2790	II	8	A3, A6, A7, A10, B2, T8	154	202	243	1 L	30 L	A	
	Acetic anhydride	8	UN1715	II	8, 3 ...	A3, A6, A7, A10, B2, T8	154	202	243	1 L	30 L	A	40

Some sections of the Hazardous Materials Regulations provide exceptions to labeling requirements. In those cases, even though the HMT specifies a label or labels, labeling is not required.

172.101, Col. 6; 173.150(b); 173.151(b); 173.152(b); 173.153(b); 173.154(b); 173.155(b); 173.306(a)

Student Activity

Open your regulations to the HMT and look up the proper shipping name “Butyl acetates.”

Notice, in Column 6, the Label code is 3. The table in 172.101(g) tells us this means a “flammable liquid” label is required. Now go to Column (8A), the Exceptions Column. Notice there is an exception provided in 173.150. Turn to 173.150 “Exceptions for Class 3 (Flammable and Combustible liquids).”

Please pause the presentation while you read paragraph (b).

There is an exception from labeling, unless the shipment is offered for transportation by air. Turn to page 37 in your student manual, read the instructions and complete Work Project M&L-3.

When you have completed and checked your work for accuracy, review the work project with the instructor or check the answers on page 53.

27

Unless otherwise provided, anyone offering for transportation a package, overpack or freight container of hazardous material must label it, when required.

172.400(a)

STUDENT RESPONSE NOTE 24-27

Unless an exception or exemption applies, anyone _____ hazardous materials for transportation must label the package in accordance with the HMR.

28

Turn to 172.400a in your HMR.

Section 172.400a(a) states conditions when labeling is not required.

Additional labeling exceptions are in other sections of the regulations.

172.400a

29

Unless excepted, no package of hazardous material may be offered or transported unless properly and accurately labeled. The hazard warning labels must accurately represent the hazard of the material in the package.

172.401(a)

STUDENT RESPONSE NOTE 28-29

Unless excepted, all packages of hazardous material must be _____ labeled.

30

No person may offer and no carrier may transport a package of hazardous material that displays markings or labels that could

- be confused with, or
- be in conflict with the labels prescribed by the HMR.

172.401(b)

STUDENT RESPONSE NOTE 30

No markings or labels may be displayed on hazardous materials packages that could be confused with or _____ with the markings and labels prescribed by the HMR.

31

The labels required by the HMR are normally used for domestic shipments and may be used for international shipments in most cases.

Several international organizations prescribe labeling requirements that may be used in addition to or in place of domestic labels.

171.11; 171.12; 171.12a; 172.401(c);172.407(f)

32

If a shipment is being transported by water, the International Maritime Organization (IMO)/ International Maritime Dangerous Goods (IMDG) Code labels may be used in place of or in addition to those required by the HMR.

172.401(c)(2)

33

If a shipment is being transported by air, the International Civil Aviation Organization (ICAO) Technical Instructions' labels may be used in place of or in addition to those required by the HMR.

172.401(c)(3)

34

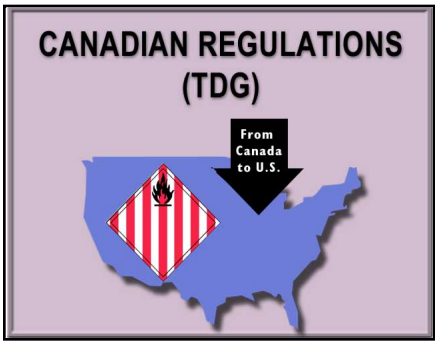

Shipments of hazardous materials being transported from Canada may display labels that conform with Canadian regulations for the Transportation of Dangerous Goods (TDG). The TDG labels may be used in place of or in addition to those required by the HMR.

172.401(c)(4)

35

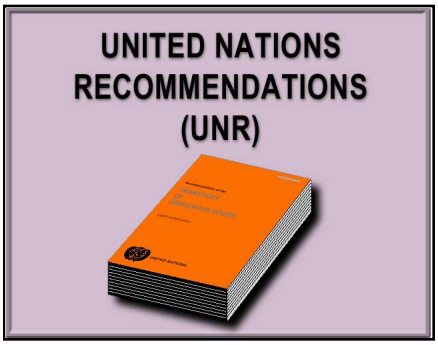

Hazardous materials warning labels listed in the United Nations Recommendations (UNR) document "Recommendations on the Transport of Dangerous Goods" may also be used in place of labels required by the HMR.

Labels used in the United States, Canadian, IMO/IMDG and ICAO regulations are generally based on the UNR although Canada has some label designs that vary from the UNR.

172.401(c)(1)

STUDENT RESPONSE NOTE 31-35

The labels required by the HMR are normally used for _____ shipments. The following labels may be used for international shipments.

Document	Mode/destination
ICAO Technical Instructions	shipments by air
IMDG Code	shipments by water
TDG	shipments from Canada
UN Recommendations	shipments in all modes

36

Labels may be affixed to packages even when not required by the HMR, provided each label accurately represents a hazard of the hazardous material in the package.

172.401(a)(1)-(2)

STUDENT RESPONSE NOTE 36

Even if not required, a label may be affixed to a package provided the label correctly represents the _____ of the material in the package.

37

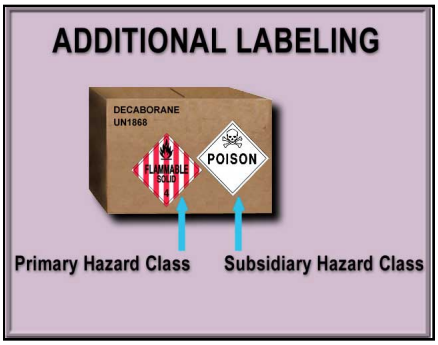

A package containing a hazardous material that meets the definition of more than one hazard class must be labeled for the additional hazard classes, as shown.

Subsidiary hazard labels may not display the hazard class or division number.

Please pause the presentation and turn to 172.402 of the HMR to review additional labeling requirements.

172.402(a)-(g)

STUDENT RESPONSE NOTE 37

Label hazardous material packages for_____ hazard class the material meets.

Student Activity

Please look up the proper shipping name “Allyl Chloride,” a Class 3 (flammable liquid), in the HMT. Column 6 of the HMT requires that two labels be affixed: 3 (FLAMMABLE LIQUID) and 6.1 (POISON or TOXIC). Class 3 (flammable liquid) is the primary hazard class; Div. 6.1 (poison or toxic) is the subsidiary hazard. Therefore, both labels must be displayed. The Division number may not be displayed on the Poison subsidiary hazard label.

Turn to page 39 in your student manual, read the instructions and complete Work Project M&L-4.

When you have completed and checked your work for accuracy, review the work project with the instructor or check the answers on page 54.

38

Hazardous materials shipped by air and authorized for cargo aircraft only must have the “CARGO AIRCRAFT ONLY” label affixed to the package. The label warns those who handle the package that it may not be transported on a passenger carrying aircraft.

172.402(c)

STUDENT RESPONSE NOTE 38

“CARGO AIRCRAFT ONLY” labeled packages are prohibited from being transported on

_____ aircraft.

Student Activity

Please look up the proper shipping name “Potassium phosphide,” and determine the labeling requirements.

For this material, Column 6 of the HMT requires two hazard warning labels, 4.3 (Dangerous When Wet) for the primary hazard and 6.1 (Poison or Toxic) for the subsidiary hazard.

In addition, Column (9A) forbids Potassium phosphide aboard a passenger carrying aircraft. Therefore, a “CARGO AIRCRAFT ONLY” label must also be affixed to the package, if transported by air.

So, when transported by air, a package of Potassium phosphide must have three labels affixed: two hazard warning labels, and one prohibition label.

Turn to page 41 in your student manual. Read the instructions and complete the final marking and labeling work project, M&L-5.

When you have completed and checked your work for accuracy, review the work project with the instructor or check the answers on page 55.

39

Sometimes two or more hazardous materials are placed in the same outside container or overpack. When this is done, the outside container or overpack must be labeled for each class of material contained.

172.404(a)-(b)

STUDENT RESPONSE NOTE 39

A package or an overpack containing two or more hazard classes must be labeled for each _____.

40

There are three authorized label modifications:

1. For Classes 1, 2, 3, 4, 5, 6, and 8, text is not required on primary and subsidiary hazard labels, if the class number is on the primary label.

2. For a package containing “Oxygen, compressed” or “Oxygen, refrigerated liquid,” the Oxidizer label may be modified. It may display the word “oxygen” instead of “oxidizer” and use Class Number “2” instead of Division “5.1.”

   The modified Oxidizer label may be used in place of the two labels “Non-Flammable Gas” and “Oxidizer.”

3. The Poison label may be modified to read “Toxic” instead of “Poison.”

172.405; 172.430(b)

STUDENT RESPONSE NOTE 40

The three authorized label _____ are:

1. the word “Oxygen” may be used in place of the word “Oxidizer” for “Oxygen, compressed,” or “Oxygen, refrigerated liquid;”

2. for Classes 1, 2, 3, 4, 5, 6, and 8, labels need not have text on the primary or subsidiary label;

3. for the Poison label, “Toxic” may be used instead of “Poison.”

41

The required labels must be printed on or affixed to the same surface of the package near the marked proper shipping name, if the package dimensions are adequate.

172.406(a)(1)

STUDENT RESPONSE NOTE 41

The required labels must be _____ on or affixed to the surface of the package near the marked proper shipping name.

42

The label may be printed on or affixed to a tag or by other suitable means when:

- the package contains no radioactive material and the label is larger than the package;
- the package surface is such that a label cannot be affixed; and/or
- when the package is a cylinder.

172.406(b)(1)-(3)

STUDENT RESPONSE NOTE 42

The label may be placed on a tag or affixed to a package by other suitable means when

- the label is _____ than the package and the package contains no radioactive material,
- the label cannot be affixed to the surface, and/or
- the package is a cylinder.

43

When labels are required, they must be on a background of contrasting color or have a dotted or solid line outer border. Labels may not be obscured by markings or attachments.

When two or more labels are required, they must also be displayed next to each other.

172.406(c)-(d),(f)

STUDENT RESPONSE NOTE 43

Display labels on contrasting color _____ or with an outer border and unobscured by other markings or attachments. When two or more labels are required, display them next to each other.

44

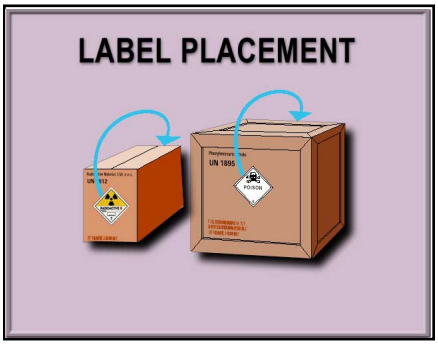

Two labels on at least two sides or ends, excluding the bottom, must appear on each

- package or overpack having a volume of 1.8 m^3 (64 cubic feet) or more;
- non-bulk package of radioactive material; or

172.406(e)(1)-(2)

45

- freight containers or aircraft unit load devices having a volume of between 1.8 m^3 (64 cubic feet) and 18 m^3 (640 cubic feet). At least one of the required labels must be displayed on or near the closure for the freight container.

172.406(e)(5)

STUDENT RESPONSE NOTE 44-45

At least ___ labels on two sides or ends, excluding the bottom, are required for

- a package of 1.8 m^3 (64 cubic feet) or more volume,
- a non-bulk package of radioactive material or
- freight containers of between 1.8 m^3 (64 cubic feet) and 18 m^3 (640 cubic feet) volume.

46

Unless excepted, each required hazardous material warning label affixed to or printed on a package must be at least 100 mm (3.9 in.) on each side. The labels must be durable and weather resistant.

A label may contain form information including the name of the maker of the product. This information must be printed outside the solid line inner border in 10-point type or smaller.

172.407(a)-(f)

STUDENT RESPONSE NOTE 46

Labels must be at least _____ (3.9 in.) on each side, durable and weather resistant.

Form identification, including manufacturer information, may also be shown.

47

All explosives labels must comply with 172.407 and 172.411.

For Explosives 1.1, 1.2, or 1.3, replace the “**” with the appropriate division number and the compatibility group letter.

For Explosives 1.4, 1.5, or 1.6, replace the “*” with the appropriate compatibility group letter.

172.407;172.411

STUDENT RESPONSE NOTE 47

For Explosives 1.1, 1.2, or 1.3 labels replace the “**” with the appropriate _____ _____ and compatibility group letter; for Explosives 1.4, 1.5, or 1.6 labels replace the “*” with the appropriate compatibility group letter.

48

Before you offer a shipment of hazardous material, be sure the packages are properly marked and labeled.

If you are the carrier, know what you are accepting for transportation. If the hazardous material is not properly marked and labeled or if the packages are not intact, do not accept the shipment!

171.2

49

If you are the enforcement officer, examine the package, overpack, freight container or transport vehicle carefully. If not properly marked or labeled, take appropriate action.

Shipments complying with the HMR will make transportation of hazardous materials safer for everyone, including you.

50

This concludes the instruction and practice portion of this module. Now is the time to assess how well the module taught you. This will be an open book test. There are no "trick" questions. Unless instructed otherwise, please complete the **Module 4 Test**. The **Module 4 Test** begins on page 43 of your Student Manual.

Instructor Note:
Please check test answers, record scores, and update training records. Review test results with students.

STUDENT RESPONSE NOTE ANSWERS begin on page 46.

WORK PROJECT ANSWERS begin on page 49.

Marking and Labeling Summary

Marking (Non-Bulk)

Proper Shipping Name ..... 172.301(a)

Identification Number ..... 172.301(a)

Technical Name ..... 172.301(b)

Consignor/Consignee ..... 172.301(d)

Authorized Abbreviations 172.308

Package Orientation Arrows 172.312

Poison-Inhalation Hazard (or Toxic-Inhalation Hazard) 172.313

ORM-D 172.316

Hazardous Substance 172.324

Labeling (Non-Bulk)

General Labeling Requirements 172.400

Labeling Exceptions 172.400a

Prohibited Labeling 172.401

Additional Labels 172.402

Mixed/Consolidated Packaging 172.404

Authorized Label Modifications 172.405

Placement of Labels 172.406

Label Specifications 172.407

Compliance Checklist

Marking	Violation	Reference
1. Shipping name		172.301(a)
2. Identification Number		172.301(a)
3. Technical Name		172.301(b)
4. Exemption Number		172.301(c)
5. General Requirements		172.304
In English		172.304(a)(1)
Not Obscured		172.304(a)(2)-(4)
6. Name/Address of Consignee (or Consignor)		172.301(d)
7. Radioactive		172.310(a)
8. Orientation Arrows (for Liquid HM)		172.312(a)-(b)
9. Inhalation Hazard		172.313(a)
10. Poison or Toxic (non-bulk plastic packagings)		172.313(b)
11. ORM-D		172.316
12. Explosive “EX” marking		172.320
13. Marine Pollutants		172.322
14. Hazardous Substances		172.324
15. Overpack		173.25(a)
16. Packaging ID Codes		178.502-503
17. Prohibited Marking		172.303

Labeling	Violation	Reference
1. Label Codes (Col. 6)		172.400(a)-(b)
2. Subsidiary hazards		172.402(a)
3. Exceptions		172.400a
4. Class Numbers on labels		172.402(b)
5. CARGO AIRCRAFT ONLY		172.402(c)
6. Mixed/consolidated packages		172.404
7. Prohibited labeling		172.401
8. Radioactive Material		172.403
9. Placement		172.406(a)-(f)

Work Projects

Marking Work Project

Work Projects M&L-1, A&B

To the Instructor

The objective of this work project is to provide a practical marking exercise. The student is provided statements of facts regarding hazardous materials shipments and graphics of packages or packaging on Work Project M&L-1A and Work Project M&L-1B.

Directions to Student(s)

Work Project M&L-1A and Work Project M&L-1B have statements of facts about specific hazardous materials. Determine the required markings thus far addressed in this module. Write or print them on the picture of the appropriate packaging – drum, box, container.

Self-Evaluation

This work project will evaluate your skill and facility in use of the Hazardous Materials Regulations (HMR) in determining correct marking requirements. When you have completed and checked your work for accuracy, either review the work project with the instructor or check the answers on pages 49 and 50.

Marking Work Project

Work Project M&L-1A

The Carson Manufacturing Company of 555 Maple Lane, Burbank, California, 90036, is shipping to the Johnstone Distribution Company of 10 Pine Street, New Orleans, Louisiana, 70122, 100 kg of Carbamate pesticides, liquid, toxic, 6.1, PG I, in a metal drum. The shipment will be transferred from one motor carrier to another. On the drum shown below, write in all required markings for the shipment thus far addressed in this module.

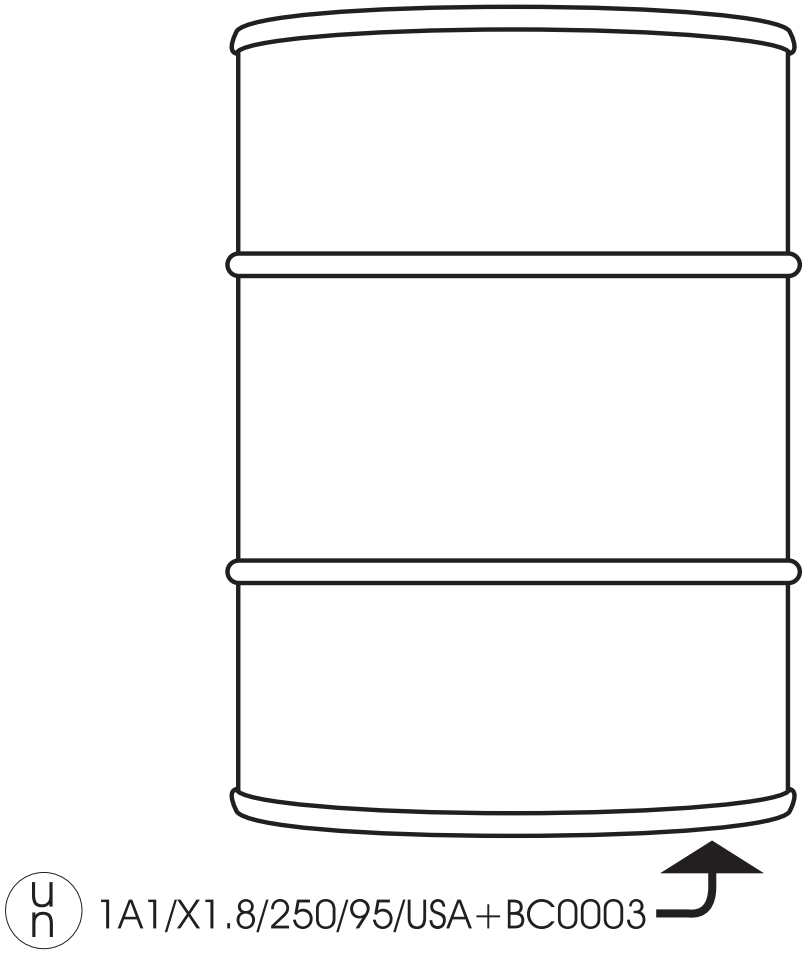

Marking Work Project

Work Project M&L-1B

The Superior Products Company of 889 Chestnut Street, Los Angeles, California, 90040, is shipping to the Guildron Chemical Company of Denver, Colorado, 80209, a drum containing 60 kg of a mixture of “Dioxane” a Class 3, and “Acetyl bromide” a Class 8 under the proper shipping name Flammable liquids, corrosive, n.o.s. The shipment will be transported by ABC Truck Lines, Inc., and transferred to Interstate Truck Systems for delivery. On the drum shown below, write in all required markings for the shipment thus far addressed in this module.

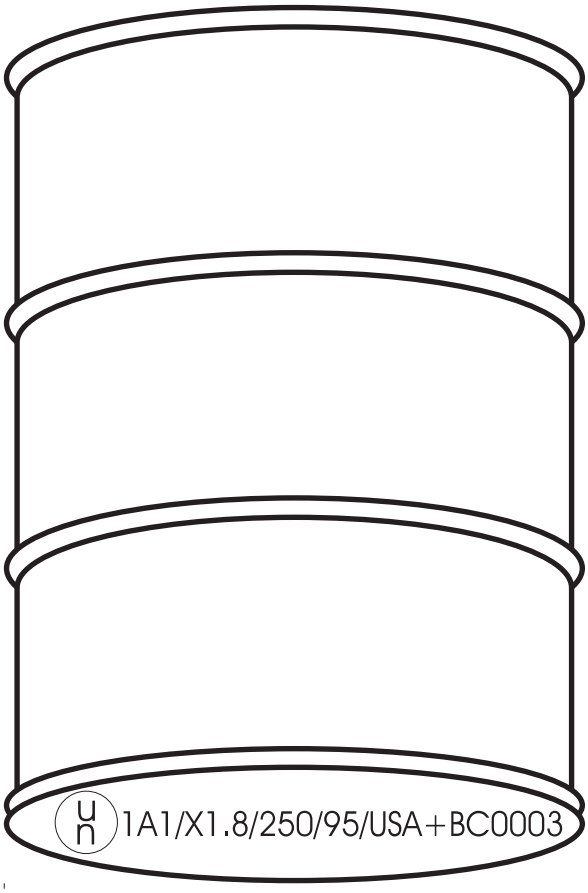

Marking Work Project

Work Projects M&L-2, A&B

To the Instructor

The objective of this work project is to provide a practical marking exercise. The student is provided statements of facts regarding hazardous materials shipments and graphics of packages or packagings on Work Project M&L-2A and Work Project M&L-2B.

Directions to Student(s)

Work Project M&L-2A and Work Project M&L-2B have statements of facts about specific hazardous materials. Determine the required markings thus far addressed in this module and write or print them on the appropriate picture of the packaging – drum, box, container.

Self-Evaluation

This work project will evaluate your skill and facility in use of the HMR in determining correct marking requirements. When you have completed and checked your work for accuracy, either review the work project with the instructor or check the answers on pages 51 and 52.

Marking Work Project

Work Project M&L-2A

The M&L Chemical Company of 333 Carroll Lane, Grand Rapids, Michigan, 49503, is shipping to the Martin Manufacturing Company of Atlanta, Georgia, 30314, 50 kg of “Benzyl Chloride”, a Class 6.1 material in a metal drum. The material is listed in Appendix A as a hazardous substance. The shipment will be transported by highway and will be transferred from one motor carrier to another. On the drum below, write in all the required markings for the shipment thus far addressed in this module.

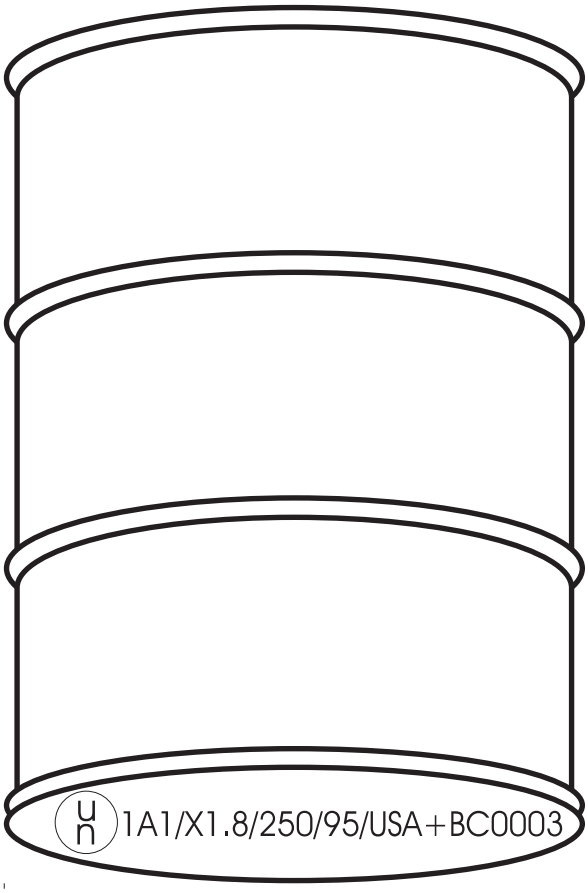

Marking Work Project

Work Project M&L-2B

The Winerlose Chemical Company of 567 Park Avenue, New York City, New York, 10021, is shipping to the Newhouse Companies of Oklahoma City, Oklahoma, 73129, 600 fiberboard boxes containing “Hexanes”, a Class 3. The entire shipment will be transported as a carload lot and will go direct from the shipper to the customer. On the fiberboard box shown below, write in all required markings for the shipment thus far addressed in this module.

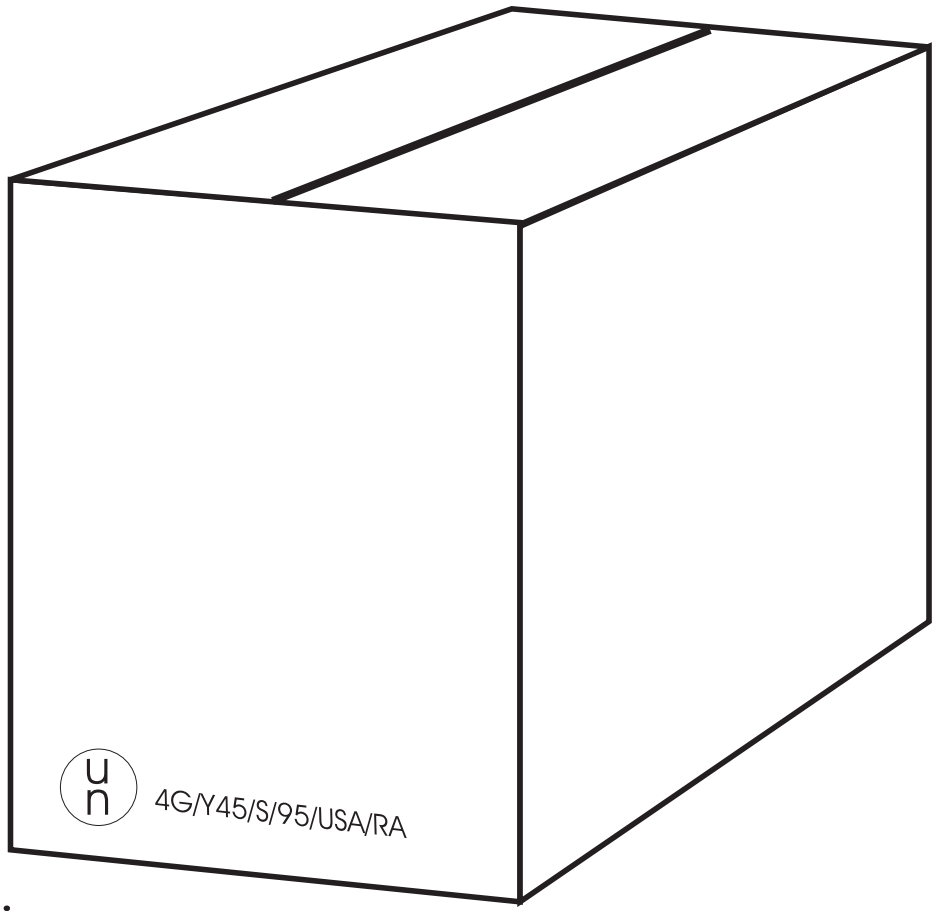

Marking and Labeling Work Project

Work Project M&L-3

To the Instructor

The objective of this work project is to provide a practical marking and labeling exercise. The student is provided a statement of facts regarding hazardous materials shipments and a graphic of package or packagings on Work Project M&L-3.

Directions to Student(s)

Work Project M&L-3 has a statement of facts about specific hazardous material. Determine the required markings and labels thus far addressed in this module and write or print them on the graphic of the packaging – drum, box, container.

Self-Evaluation

This work project will evaluate your skill and facility in use of the HMR in determining the correct marking and labeling requirements. When you have completed and checked your work for accuracy, either review the work project with the instructor or check the answers on page 53.

Marking and Labeling Work Project

Work Project M&L-3

The L.D. Frost Company of 123 Cowboy Road, Dallas, Texas, 75215, is shipping to the General Electric Company of Kansas City, Missouri, 64143, 150 fiberboard boxes (4.5 kg each) containing “Methyl acetate”, a Class 3. The shipment is packaged and offered as a limited quantity (Ltd. Qty.) and will be transferred from one motor carrier to another. On the box below, write all the required markings and labels for the shipment thus far addressed in this module.

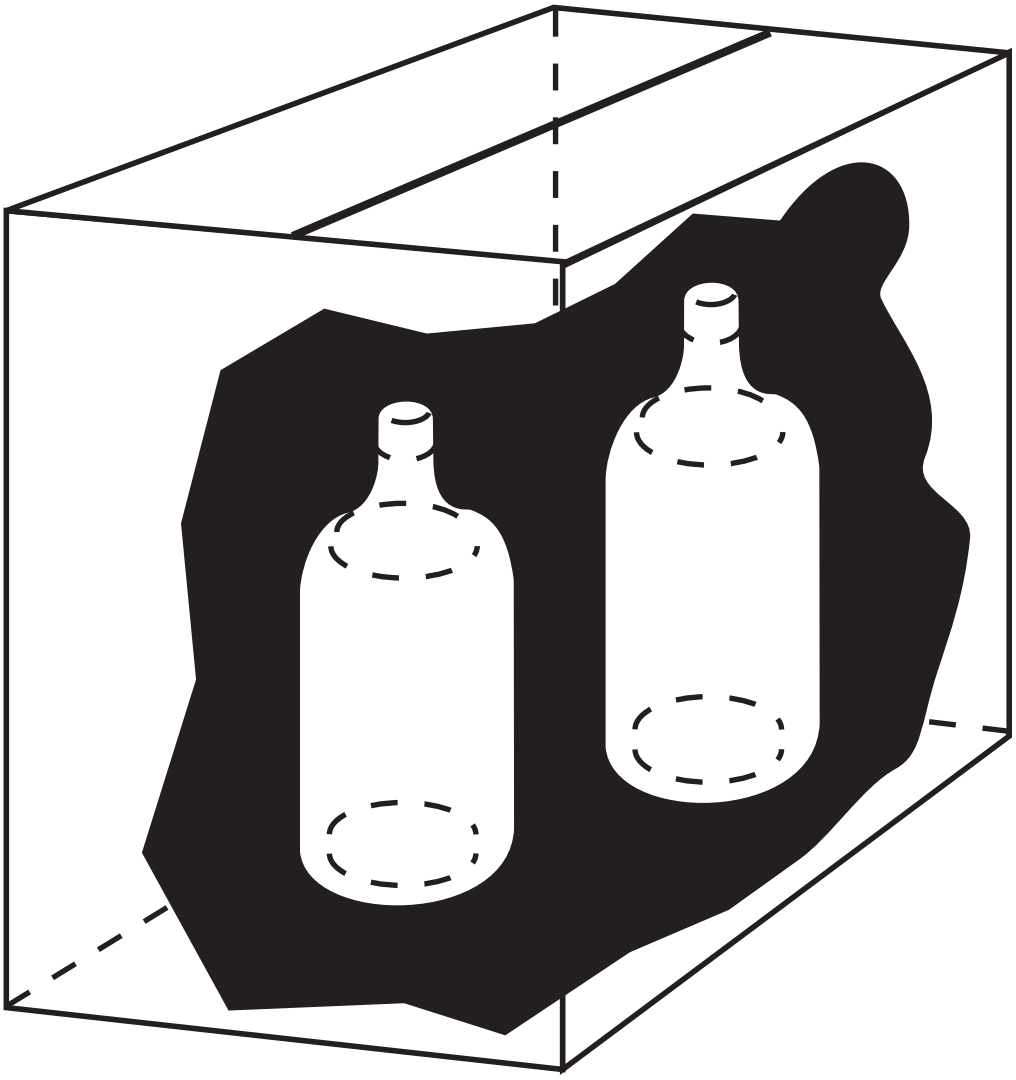

Marking and Labeling Work Project

Work Project M&L-4

To the Instructor

The objective of this work project is to provide a practical marking and labeling exercise. The student is provided a statement of facts regarding hazardous material shipment and a graphic of package or packaging on Work Project M&L-4.

Directions to Student(s)

Work Project M&L-4 has a statement of facts about specific hazardous material. Determine the required markings and labels thus far addressed in this module and write or print them on the graphic of the packaging — drum, box, container.

Self-Evaluation

This work project will evaluate your skill and facility in use of the HMR in determining the correct marking and labeling requirements. When you have completed and checked your work for accuracy, either review the work project with the instructor or check the answers on page 54.

Marking and Labeling Work Project

Work Project M&L-4

The Scott Manufacturing Company of Jackson, Mississippi, 39307, is shipping to the Grant Chemical Company, Inc., of 3 Viking Parkway, Duluth, Minnesota, 55811, 50 kg of a mixture of “Isobutyl formate” a Class 3 material, and “Methyl parathion,” a Division 6.1 material, in a drum under the proper shipping name Toxic Liquid, flammable, organic, n.o.s. The shipment will be transported from one motor carrier to another. On the drum below, write in all required markings and labels for the shipment thus far addressed in this module.

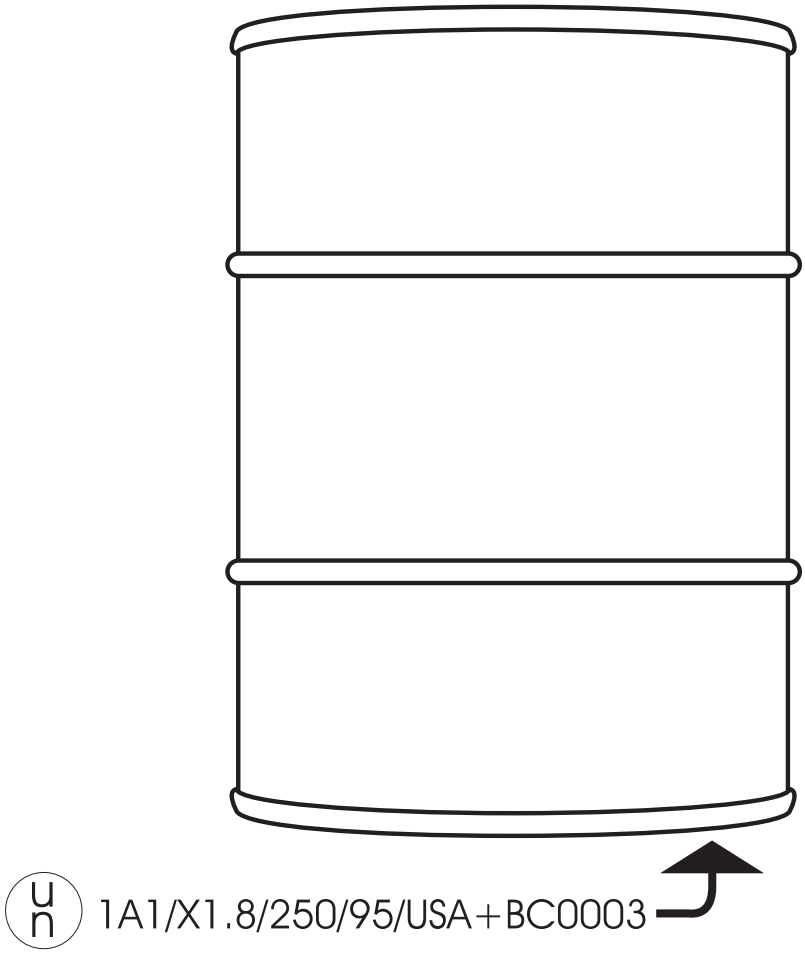

Marking and Labeling Work Project

Work Project M&L-5

To the Instructor

The objective of this work project is to provide a practical marking and labeling exercise. The student is provided a statement of facts regarding hazardous material shipment and a graphic of package or packaging on Work Project M&L-5.

Directions to Student(s)

Work Project M&L-5 has a statement of facts about specific hazardous material. Determine the required markings and labels thus far addressed in this module and write or print them on the graphic of the packaging — drum, box, container.

Self-Evaluation

This work project will evaluate your skill and facility in use of the HMR in determining the correct marking and labeling requirements. When you have completed and checked your work for accuracy, either review the work project with the instructor or check the answers on page 55.

Marking and Labeling Work Project

Work Project M&L-5

The Heritage Company, Inc., of 4 Yellow Brick Road, Willard, Kansas, 05815, is shipping to the Atlas Corporation of Honolulu, Hawaii, 96815, 14 kg of “Rubidium,” a Division 4.3, Dangerous when wet material, in a wooden box. The shipment will be transported by highway and by air. On the wooden box shown below, write in all required markings and labels for the shipment addressed in this module.

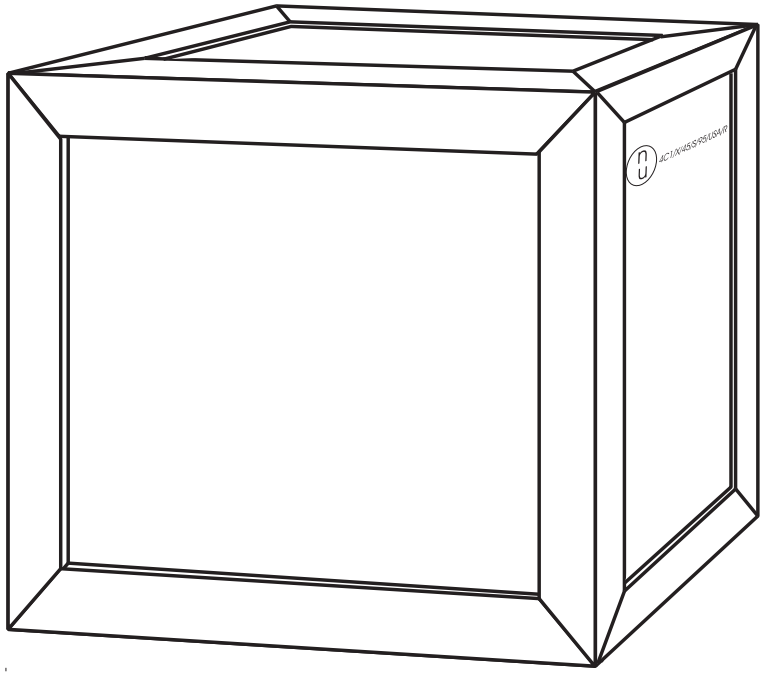

Module 4 Test

1. Marking means: Placing on the outside of the shipping container information, such as _____ .

   a. proper shipping name of the material
   b. identification number
   c. other descriptive information
   d. all of the above

2. Labeling means placing on the outside of the shipping container a warning notice specific to the hazard class and/or the handling precautions for the material.

   a. True
   b. False

3. A fiberboard box containing a 1.5 liter bottle of Dipentene must be marked with orientation arrows on two opposite vertical sides.

   a. True
   b. False

4. For a package of Benzene, the hazard class must be marked on the outside of the package.

   a. True
   b. False

5. Required package markings must be in English.

   a. True
   b. False

6. A package that meets the criteria of “Poison-Inhalation Hazard” must be marked _____ .

   a. “Poison-Inhalation Hazard” on two sides
   b. “Inhalation Hazard”
   c. “Danger - Inhalation Hazard”
   d. “Toxic - Poison Inhalation Hazard”

7. Unless excepted, each package of hazardous material must be marked with _____ .

   a. Proper shipping name
   b. Hazard class
   c. Identification number
   d. a and c

8. Identification numbers are not required to be marked on packages containing limited quantities (Ltd. Qty.)

   a. True
   b. False

9. The following abbreviation(s) may be used in a “proper shipping description” marking _____ .

   a. AMMO
   b. Blk. Pwd.
   c. ORM
   d. Auto. Btry.

10. A non-bulk package containing a hazardous substance that meets or exceeds the reportable quantity per package must be marked _____.

    a. H.S.
    b. H.M.
    c. RQ
    d. RQ, H.S.

11. A package containing an ORM-D must be labeled with an ORM label.

    a. True
    b. False

12. Referring to Column 6 of the Hazardous Materials Table and 172.101(g), indicate what label(s), if any, is/are specified for Liquefied petroleum gas.

    a. Poison
    b. Non-Flammable Gas
    c. Flammable Gas
    d. Corrosive and Poison Inhalation Hazard

13. A package has a “DANGEROUS WHEN WET” label displayed. That means _____ .

    a. the material is combustible
    b. the material is corrosive
    c. don’t ship during inclement weather
    d. the material is incompatible with water

14. A Class 3, PG I that also meets the definition of a 6.1, PG II must be labeled _____ .

    a. "POISON LIQUID" and "FLAMMABLE"
    b. "FLAMMABLE" and "POISON"
    c. "POISON LIQUID" and "FLAMMABLE LIQUID"
    d. "FLAMMABLE LIQUID" and "POISON" or "TOXIC"

15. A label is not required on a _____ .

    a. compressed gas cylinder permanently mounted on a transport vehicle
    b. non-bulk package containing combustible liquid
    c. package containing an ORM-D not packaged with any other hazard class requiring labels
    d. all of the above

16. A material meeting two hazard classes must be labeled for each class; both labels must have the class number on the label.

    a. True
    b. False

17. When two or more different labels are required, they must be displayed _____ .

    a. on both ends of the package
    b. three inches apart
    c. next to each other
    d. none of the above

18. A material classed as a Division 5.1, that also meets the definition of a Class 8, PG II material, shall be labeled "OXIDIZER" and "CORROSIVE."

    a. True
    b. False

19. A 4.5 liter package of Methyl fluoride may be transported aboard a cargo-only aircraft without a "CARGO AIRCRAFT ONLY" label.

    a. True
    b. False

Answer Sheets

Student Response Note Answers

1-2 "Marking" means the required information on outer packagings of hazardous materials. This includes a proper shipping name, ID No., specifications or UN marks plus required instructions and/or cautions.

3-4 Non-bulk packages of hazardous materials must be marked with the proper shipping name and ID No., preceded by the appropriate letters, "UN" or "NA."

5 No ID No. is needed on limited quantity or ORM-D packages unless packed with other hazardous materials.

6 Mark the word "waste" before the proper shipping name on all packages of hazardous waste, unless the package bears the EPA "hazardous waste" marking.

7-8 Mark the technical name(s) of the material(s) in parentheses in association with the proper shipping name when a "G" is shown in Column 1 of the HMT.

9 For the shipping descriptions that show the letter "G" in column 1 of the HMT, mark the package with the technical name. For mixtures and solutions containing two or more hazardous materials, the name of at least two of the components most predominant to the hazard(s) must be included. Place the technical names in parentheses in association with the proper shipping name.

10 Packages of poisonous material in Division 6.1, PG I and II, or Division 2.3 material, must be marked with the technical name of the material either in the proper shipping name or marked in parentheses in association with the proper shipping name.

11 Mark "Inhalation Hazard" on packages containing material that meets the "Poison- Inhalation Hazard" or "Toxic-Inhalation Hazard" criteria.

12 All markings must be durable, in English, and printed on or affixed to the package surface or on a label, tag or sign. They must be placed on a sharply contrasting background. Required markings must be unobscured and located away from any other markings.

13 Every non-bulk package of hazardous material offered for transportation must be marked with the name and address of the consignee or consignor except

- when transported by highway and not transferred to another carrier; and
- when the entire contents of a carload, truckload, or freight container is shipped from one consignor to one consignee.

14-18 Combination packages and overpacks containing inner packagings of liquid hazardous material must be packed with closures (or filling holes) upright.

19 Mark the ORM-D designation in a rectangle following or below the proper shipping name on a non-bulk package. This certifies that the package is in proper condition for transportation. The marking certification does not take the place of the shipping paper certification, if required.

20 When the proper shipping name does not identify the hazardous substance by name, the name of the hazardous substance must be marked on the non-bulk package. This information must be in parentheses in association with the proper shipping name.

21 Non-bulk packages of hazardous substances must be marked with the letters "RQ" in association with the proper shipping name.

22-23 Labels identify the primary and subsidiary hazard(s) of materials and are applied to the outside of packages of hazardous materials.

24-27 Unless an exception or exemption applies, anyone offering hazardous materials for transportation must label the package in accordance with the HMR.

28-29 Unless excepted, all packages of hazardous material must be properly and accurately labeled.

30 No markings or labels may be displayed on hazardous materials packages that could be confused with or conflict with the markings and labels prescribed by the HMR.

31-35 The labels required by the HMR are normally used for domestic shipments. The following labels may be used for international shipments.

36 Even if not required, a label may be affixed to a package provided the label correctly represents the hazard of the material in the package.

37 Label hazardous material packages for each hazard class the material meets.

38 “CARGO AIRCRAFT ONLY” labeled packages are prohibited from being transported on passenger carrying aircraft.

39 A package or an overpack containing two or more hazard classes must be labeled for each hazard class.

40 The three authorized label modifications are:

1. the word “Oxygen” may be used in place of the word “Oxidizer” for “Oxygen, compressed,” or “Oxygen, refrigerated liquid;”
2. for Classes 1, 2, 3, 4, 5, 6, and 8, labels need not have text on the primary or subsidiary label;
3. for the Poison label, “Toxic” may be used instead of “Poison.”

41 The required labels must be printed on or affixed to the surface of the package near the marked proper shipping name.

42 The label may be placed on a tag or affixed to a package by other suitable means when

- the label is larger than the package and the package contains no radioactive material,
- the label cannot be affixed to the surface, and/or
- the package is a cylinder.

43 Display labels on contrasting color background or with an outer border and unobscured by other markings or attachments. When two or more labels are required, display them next to each other.

44-45 At least two labels on two sides or ends, excluding the bottom, are required for

- a package of 1.8 m^3 (64 cubic feet) or more volume,
- a non-bulk package of radioactive material or
- freight containers of between 1.8 m^3 (64 cubic feet) and 18 m^3 (640 cubic feet) volume.

46 Labels must be at least 100 mm (3.9 in.) on each side, durable and weather resistant. Form identification, including manufacturer information, may also be shown.

47 For Explosives 1.1, 1.2, or 1.3 labels replace the “**” with the appropriate division number and compatibility group letter; for Explosives 1.4, 1.5, or 1.6 labels replace the “*” with the appropriate compatibility group letter.

Marking Work Project Answers

Work Project M&L-1A

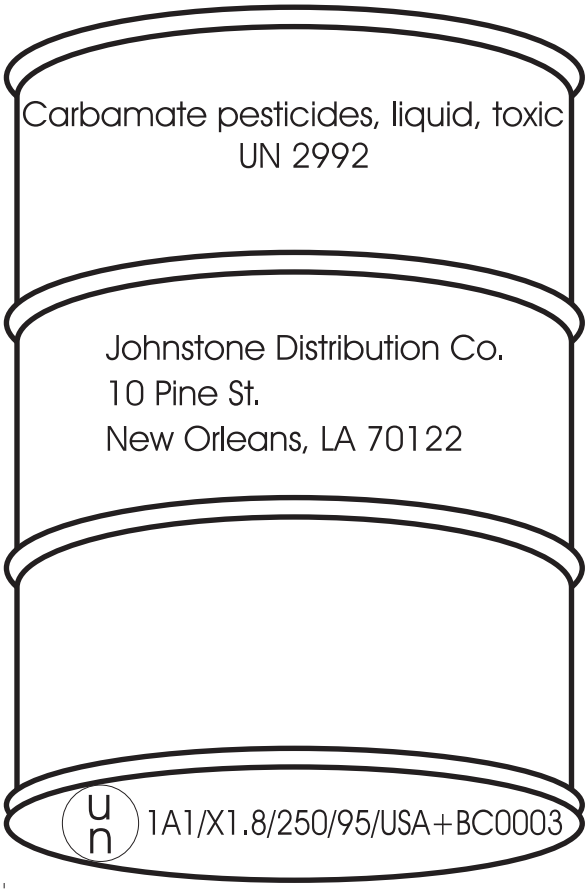

Work Project M&L-1B

Work Project M&L-2A

Work Project M&L-2B

Work Project M&L-3

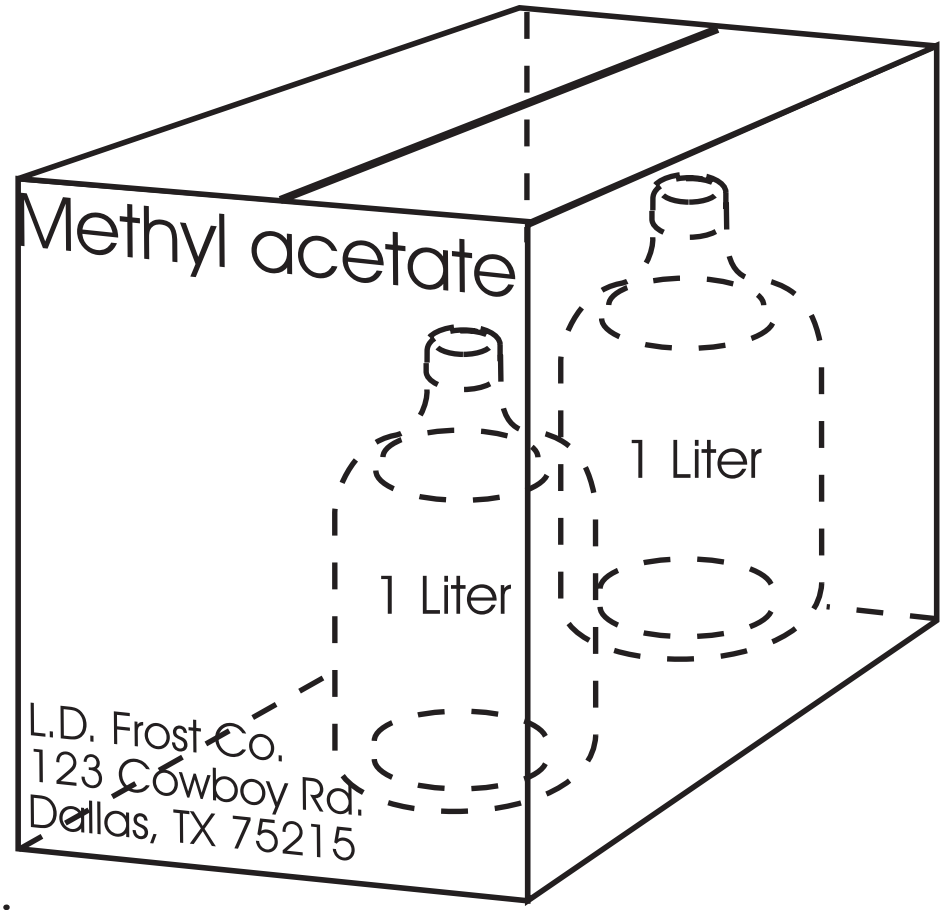

Note: Package Orientation Arrows are not required for limited quantity (Ltd. Qty.) shipments of Class 3 in inner packagings of one liter or less. See 172.312(c)(2).

The identification number is not required for Ltd. Qty. shipments when packed with no other hazardous material. See 172.301(f)(1).

No label is required because it is a Ltd. Qty. shipment, not going by air. 173.150(b)

Marking and Labeling Work Project Answers

Work Project M&L-4

Work Project M&L-5